ORDER NO. AD9603053C8

# Service Manual

CD Changer

Compact Disc Player

# SL-CH770

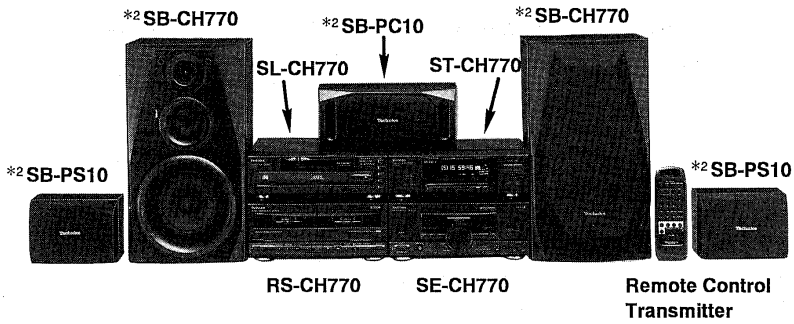


**Colour**

(K) : Black

**Areas**

| Suffix for Model No. | Area | Colour |
|---|---|---|
| (E) | Europe, Asia, Latin America, Middle East, Africa and Oceania | (K) |

**System: SC-CH770**

**Because of unique interconnecting cables, when a component requires service, send or bring in the entire system.**

## RAE0150Z MECHANISM SERIES

## Specifications

### ■ Audio

| | |
|---|---|
| **DA converter** | 1 bit 2 DAC MASH |

### ■ Pickup

| | |
|---|---|
| **Wavelength** | 780 nm |

### ■ General

| | |
|---|---|
| **Dimensions (W × H × D)** | 270 × 89 × 330 mm |
| **Weight** | 2.4 kg |

**Notes:**
Specifications are subject to change without notice.
Weight and dimensions are approximate.

*1 MASH is a trademark of NTT.

| System | Tuner/sound processor | Compact disc changer | Amplifier | Cassette deck | Front speakers | Center speaker | Surround speakers |
|---|---|---|---|---|---|---|---|
| **SC-CH770** | ST-CH770 | **SL-CH770** | SE-CH770 | RS-CH770 | *2 SB-CH770 | *2 SB-PC10 | *2 SB-PS10 |

*2 For Europe area: ..... Made in PAES
Except for Europe area : ..... Made in NABEL

**⚠WARNING**

This service information is designed for experienced repair technicians only and is not designed for use by the general public. It does not contain warnings or cautions to advise non-technical individuals of potential dangers in attempting to service a product.
Products powered by electricity should be serviced or repaired only by experienced professional technicians. Any attempt to service or repair the product or products dealt with in this service information by anyone else could result in serious injury or death.

Technics®

© 1996 Matsushita Electric Industrial Co., Ltd.
All rights reserved. Unauthorized copying and distribution is a violation of law.

# Contents


| | Page |
|---|---|
| Handling Precautions for Traverse Deck | 2 |
| Precaution of Laser Diode | 2, 3 |
| Location of Controls | 3 |
| How to Set the "Transport Mode" | 3 |
| Loading and Checking Compact Discs | 4 |
| Listening to Compact Discs | 5 |
| Operation Check and Main Component Replacement Procedures | 6~17 |
| Error Code Display and Servo Adjustment Function | 18, 19 |
| To Supply Power Source | 20 |
| Schematic Diagram | 21~25 |
| Printed Circuit Board Diagram | 26~28 |
| Wiring Connection Diagram | 28 |
| Function of IC Terminals | 29~31 |
| Troubleshooting Guide | 32, 33 |
| Block Diagram | 34, 35 |
| Replacement Parts List | 36~39 |
| Cabinet Parts Location | 40 |
| Loading Unit Parts Location | 41 |


**NOTE:**
**Refer to the service manual for Model No. SE-CH770 (ORDER No. AD9603055C8) for information on "Accessories", "Stacking the Components", "Connections" and "Packaging".**

**CAUTION:**
THIS PRODUCT UTILIZES A LASER.
USE OF CONTROLS OR ADJUSTMENTS OR PERFORMANCE OF PROCEDURES OTHER THAN THOSE SPECIFIED HEREIN MAY RESULT IN HAZARDOUS RADIATION EXPOSURE.

# Handling Precautions for Traverse Deck

The laser diode in the traverse deck (optical pickup) may break down due to potential difference caused by static electricity of clothes or human body. So, be careful of electrostatic breakdown during repair of the traverse deck (optical pickup).

## • Handling of traverse deck (optical pickup)

1. Do not subject the traverse deck (optical pickup) to static electricity as it is extremely sensitive to electrical shock.
2. To protect the laser diode against electrostatic breakdown, short the flexible board (FFC board) with a clip or similar object.
3. Take care not to apply excessive stress to the flexible board (FFC board).
4. Do not turn the variable resistor (laser power adjustment). It has already been adjusted.

## • Grounding for electrostatic breakdown prevention

1. Human body grounding
   Use the anti-static wrist strap to discharge the static electricity from your body.
2. Work table grounding
   Put a conducive material (sheet) or steel sheet on the area where the traverse deck (optical pickup) is placed, and ground the sheet.

**Caution:**
The static electricity of your clothes will not be grounded through the wrist strap. So, take care not to let your clothes touch the traverse deck (optical pickup).

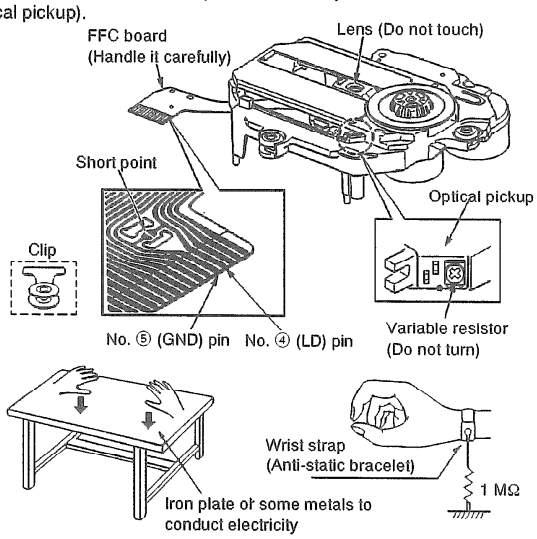


## Caution when Replacing the Traverse Deck:

The traverse deck has a short point shorted with solder to protect the laser diode against electrostatic breakdown. Be sure to remove the solder from the short point before making connections.

# Precaution of Laser Diode

**CAUTION:** This product utilizes a laser diode with the unit turned "on", invisible laser radiation is emitted from the pick up lens.
Wave length: 780 nm
Maximum output radiation power from pick up: 100 μW/VDE

Laser radiation from the pick up unit is safety level, but be sure the followings:

1. Do not disassemble the pick up unit, since radiation from exposed laser diode is dangerous.
2. Do not adjust the variable resistor on the pick up unit. It was already adjusted.
3. Do not lock at the focus lens using optical instruments.
4. Recommend not to lock at pick up lens for a long time.

**ACHTUNG:** Dieses produkt enthält eine laserdiode. Im eingeschalteten zustand wird unsichtbare laserstrahlung von der lasereinheit adgestrahit.
Wellenlänge: 780 nm
Maximale strahlungsleistung der laserinheit: 100 μW/VDE

Die strahlung an der lasereinheit ist ungefährlich, wenn folgende punkte beachtet werden:

1. Die lasereinheit nicht zerlegen, da die strahlung an der freigelegten laserdiode gefährlich ist.
2. Den werksseitig justierten einstellregler der lasereinreit nicht verstellen.
3. Nicht mit optischen instrumenten in die fokussierlinse blicken.
4. Nicht über längere zeit in die fokussierlinse blicken.

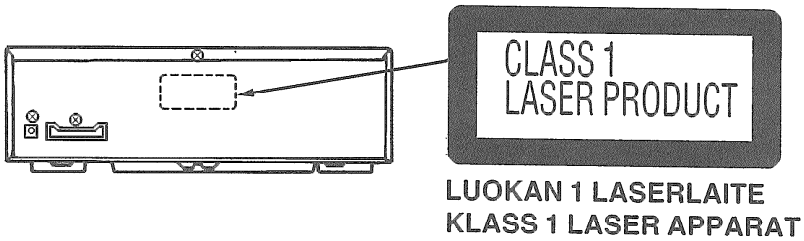


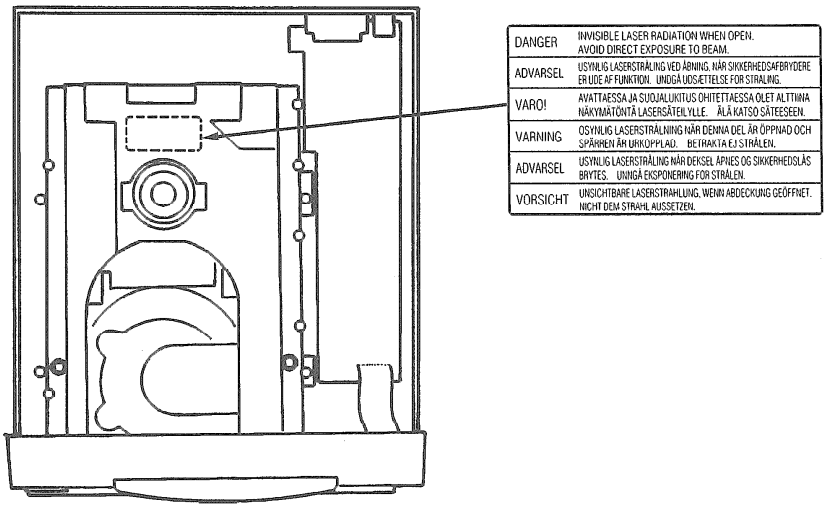


## ■ Location of Controls

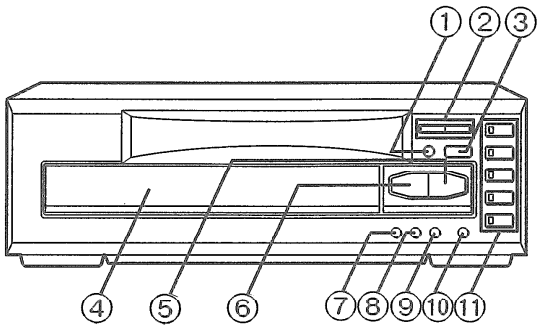


① Pause button (II)
② Skip/search buttons (SKIP/SEARCH)
③ Disc tray open/close button (⏏ OPEN/CLOSE)
④ Disc tray
⑤ Play button and indicator (▷)
⑥ Stop button (□)
⑦ Random play button (RANDOM)
⑧ Repeat button (REPEAT)
⑨ AI edit button (AI EDIT)
⑩ Disc check button (DISC CHECK)
⑪ Disc select buttons and indicators (DISC)

## ■ How to Set the "Transport Mode"

**When the alignment of the unit is finished, please make sure to set it to the "Transport Mode" as following procedures;**

1. Take all CDs out from the unit.
2. With pressing the STOP key for more than 2 seconds, press the DISC 5 key for more than 2 seconds at the same time.
   The traverse unit is lifted up to the top place, and all the disc trays are fixed automatically.
3. Turn the unit off.

**NOTE:**

The next time the unit is turned on, the "Transport Mode" is automatically cancelled.

# Loading and Checking Compact Discs

Always stop the changer before loading or changing CDs. You cannot change CDs while a disc is playing.

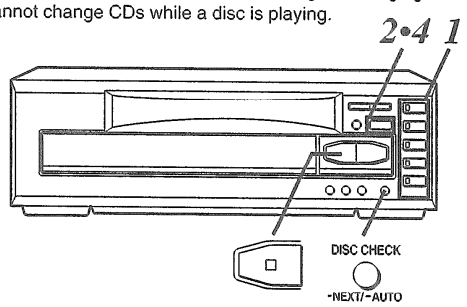


## How to load CDs

**1 Press DISC 1–5, whichever you want to open.**

**2 Press ▲ OPEN/CLOSE.**

**3 Set the CD in the tray.**

- How to hold CDs

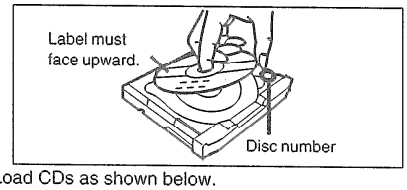


- Load CDs as shown below.

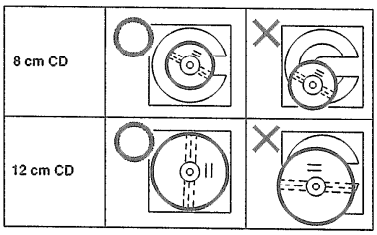


**4 Press ▲ OPEN/CLOSE.**

The open tray will close.

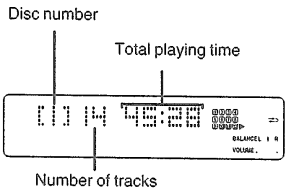


**5 To load other CDs, repeat steps 1 through 4.**

**For your reference:**

If the tray you want to open is already shown on the display, you obviously do not need to perform step 1.

## How to check which trays have discs

DISC CHECK is a convenient way to know what discs you have in your changer and where.

**Press DISC CHECK (-NEXT).**

Not the disc number shown on the display, but the next tray after that will open. For example, when disc 4 is displayed, tray 5 will open.

- Every time you press the button, the next tray opens.
- You can change the CD while the tray is open.
- To close the tray, press ▲ OPEN/CLOSE.

**Hold down DISC CHECK (–AUTO).**

The trays will open (and close) automatically one after another. The first one to open will be the next tray after the disc number shown on the display. This way, you can check all trays in a row.

- To stop the auto check in course, press □.

**Note**

Do not attempt to change CDs while trays are opening and closing in the auto check.

## Disc indicators

When you open or close a tray with the ▲ OPEN/CLOSE button, the changer automatically detects whether there is a CD in the tray or not. The indicator will act as follows.

| | |
|---|---|
| ■ (orange) | There's a CD in the tray. |
| Out | There isn't a CD in the tray. |

While the CD is playing, its indicator is green.

**Note**

In the following cases, CD detection is OFF. The indicators will be orange whether there is a disc in the tray or not.

- When the tray is closed with DISC CHECK
- When the tray is closed with DISC 1–5
- When the tray is closed by selecting a mode other than CD

**For your reference:**

While the CD changer is changing discs, the disc indicators act as follows.

- All the indicators the changer skips through will flash.
- The indicator of the selected disc (or last disc in auto DISC CHECK) will light up.

# Listening to Compact Discs

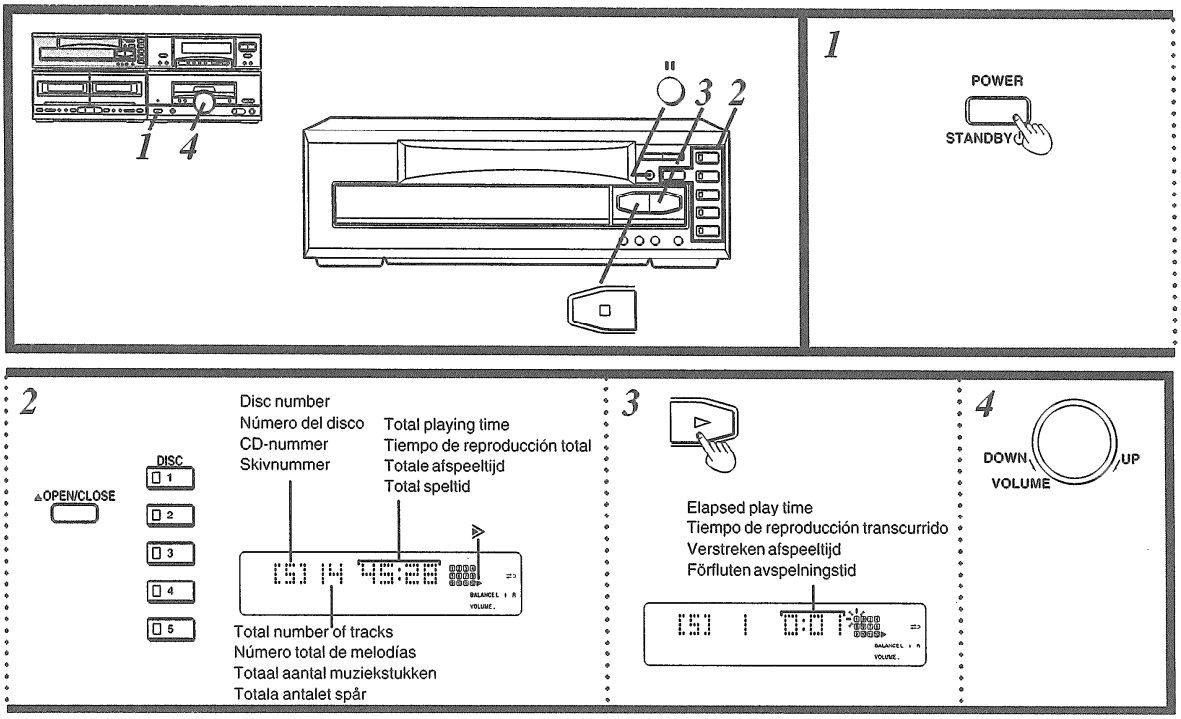


*1* **Switch on the power.**

*2* **Insert CDs in the trays.**

When the "CD" input source is selected, disc number, total number of tracks, and total playing time will appear on the display.
When there are 13 or more tracks on the CD, " ⊳ " will appear.

**Note**
The total playing time displayed when a disc is loaded includes intervals between tracks. This is why sometimes the displayed time is longer than that listed on the CD.

*3* **Press ⊳.**
The changer will automatically play all tracks on all discs. It will start from the first track on the disc shown on the display, and will continue until playing the last track of the final disc (see below).

*4* **Adjust the volume level as you like.**

**To stop the disc play:**
Press □.

**To temporarily stop the disc play:**
Press ❚❚ button. ⊳ indicator flashes up green.
To play again, press ⊳.

**What is meant by "final disc"?:**
For example, if play starts from disc 4, disc 3 will be the "final disc".
**Order of progression:**
Disc 4→5→1→2→3

**When "NO DISC" display appears:**
It indicates that the disc tray now shown on the display is empty.

**About ⊳ indicator:**
While halted: Lights up orange.
While playing: Lights up green.

**For your reference:**
If you press ⊳ instead of ⏏ OPEN/CLOSE after inserting a CD, the tray will close and play will start directly from the track 1.

## Operation Check and Main Component Replacement Procedures

**NOTE**

1. **This section describes procedures for checking the operation of the major printed circuit boards and replacing the main components.**
2. **For reassembly after operation checks or replacement, reverse the respective procedures. Special reassembly procedures are described only when required.**
3. **Select items from the following index when checks or replacement are required.**
4. **Illustrated screws are equivalent to actual size.**
5. **Refer the parts No. on the page of "Main Component Replacement Procedures", if necessary.**

### • Contents


• **CD Changer Disassembly / Reassembly** page.
1. Removal for the CD changer unit. ........ 6,7.
2. Removal for the traverse unit. ........ 8.
3. Disassembly for the CD changer unit. ........ 8.9.
4. Reassembly for the CD changer unit. ........ 10~13.
5. Inspection for the CD changer unit. ........ 13.

• **Checking Procedures for each P.C.B.**
1. Checking for the main P.C.B.. ........ 14.
2. Checking for the operation P.C.B.. ........ 14,15.
3. Checking for the servo P.C.B.. ........ 15,16.

• **Main Component Replacement Procedures**
1. Replacement for the traverse deck ass'y. ........ 16,17.


## CD Changer Disassembly / Reassembly

**Removal for the CD changer unit**

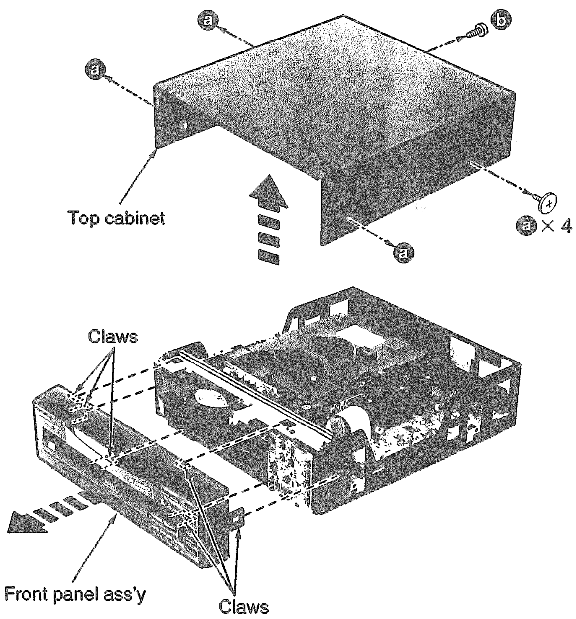


Step 1: Remove the 5 screws.

Step 2: Remove the top cabinet.

Step 3: Release the 6 claws, and then remove the front panel ass'y.

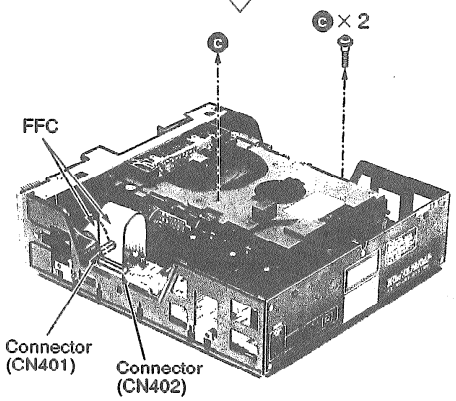


**Step 4** Pull out the FFC (2 points).

**Step 5** Remove the 2 screws.

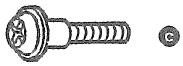


[RHD30065]

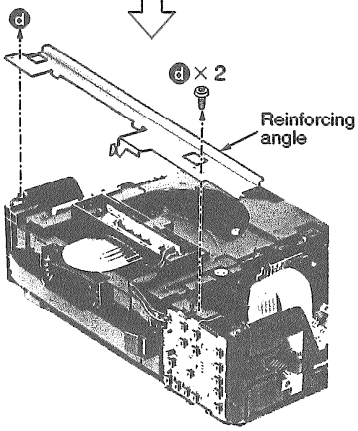


**Step 6** Remove the 2 screws.

[XTB3+8JFZ]

**Step 7** Remove the reinforcing angle.

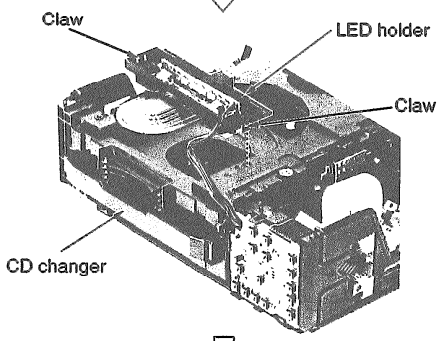


**Step 8** Release the 2 claws, and then remove the LED holder.

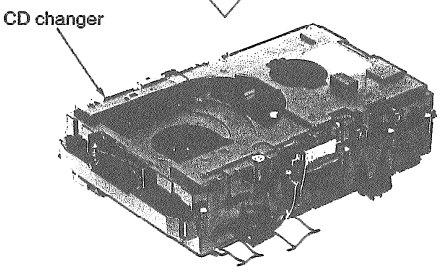


The CD changer unit will be removed.

## Removal for the traverse unit

**NOTE**
Locate the traverse unit to the position "DOWN".

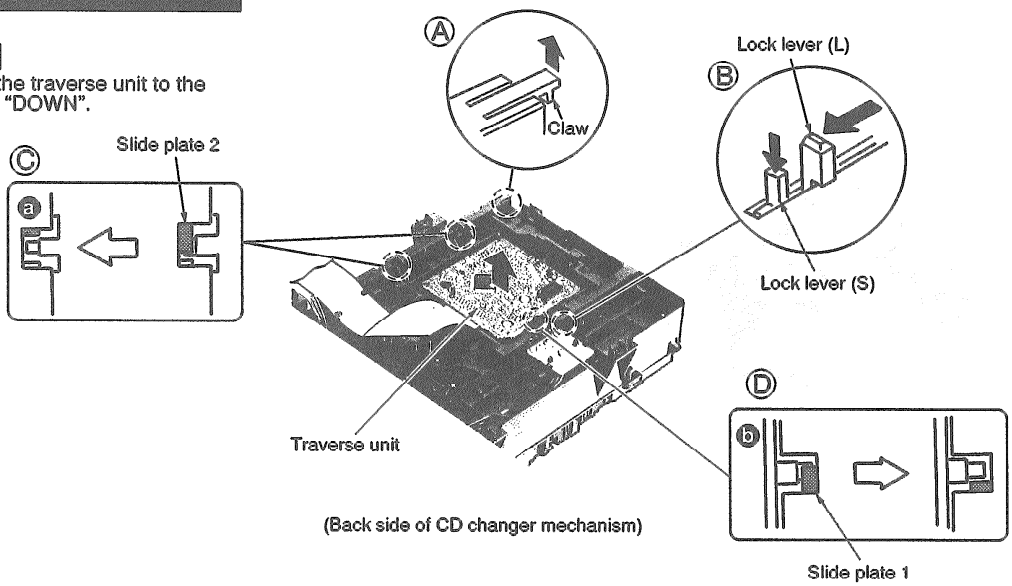


### Procedures

Step 1 Push the lock lever (S) with lifting the claw, and then push the lock lever (L) in the direction of arrow (➡).

Refer to the figures Ⓐ and Ⓑ.

Step 2 The slide plate 1 and 2 of traverse retain boss ⓐ and ⓑ are open.

Refer to the figures Ⓒ and Ⓓ .

Step 3 Push the traverse unit in the direction of arrow (➡).

(The FFC is connected.)

Step 4 The traverse unit will be removed.

## Disassembly for the CD changer unit

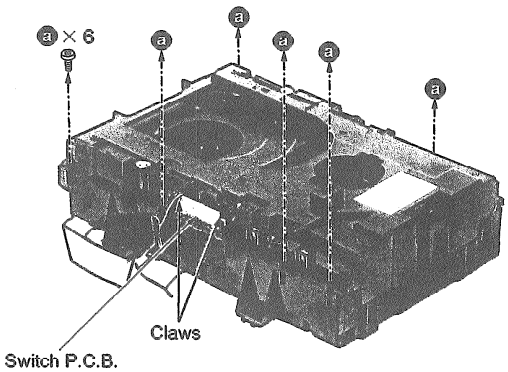


**NOTE**
Locate the traverse unit to the position "DOWN".

Step 1 Release the 2 claws, and then remove the switch P.C.B..

Step 2 Remove the 6 screws.

[XTB3+10J]

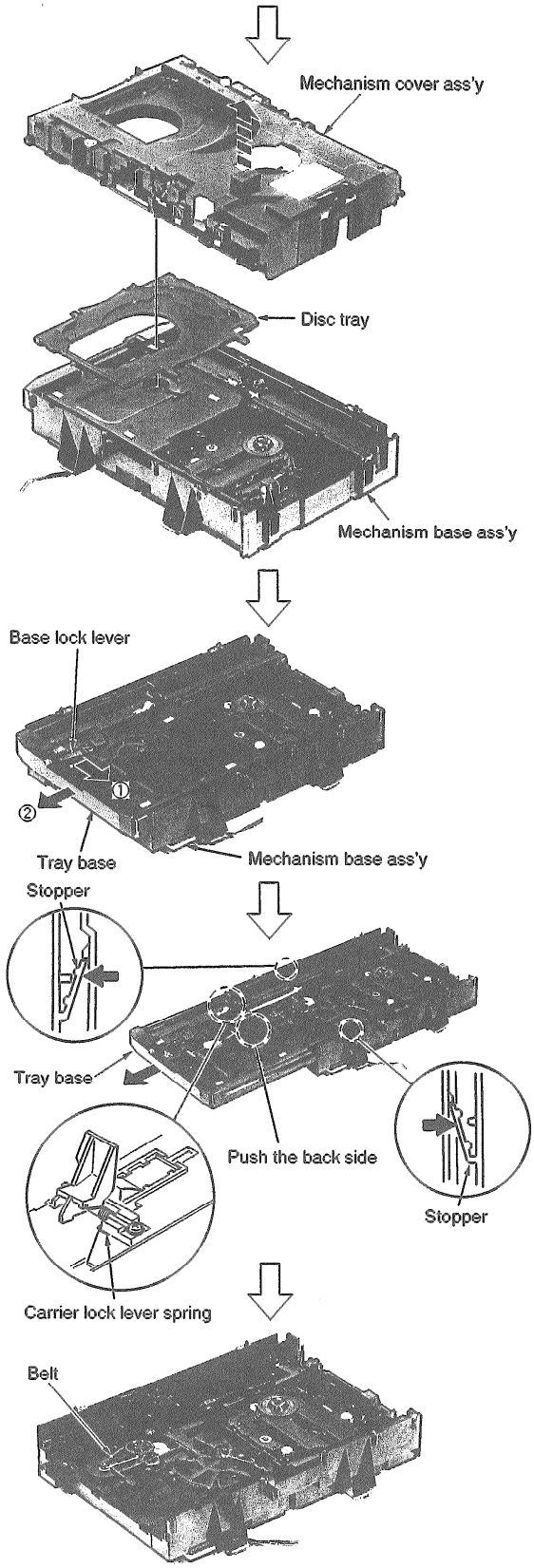


**Step 3** Remove the mechanism cover ass'y.

(!) 4 disc trays contacted to the mechanism cover ass'y will be removed.
1 disc tray is removed to the mechanism base ass'y.

**Step 4** Remove the disc tray sided mechanism base ass'y.

**Step 5** Unlock the base lock lever.

**Step 6** Draw the tray base until it will be stopped.

**Step 7** Release the stopper manually.

**Step 8** Draw the tray base.

(!) In case that the tray base can not be open due to hooking, draw the tray base with finger pressing the back side indicated by ◌ of base. (Take care handling of stopper.)

(!) Take care not avoid the carrier lock lever spring.

The belt and each part can be replaced after above procedures are performed.

## Reassembly for the CD changer unit

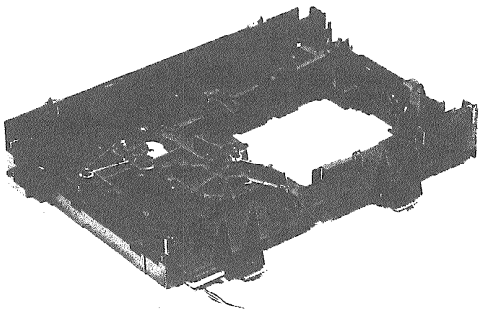

(Back side)

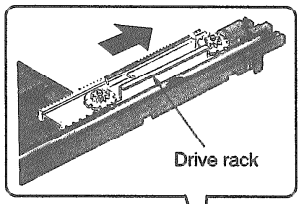


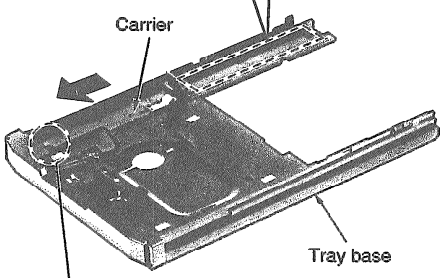


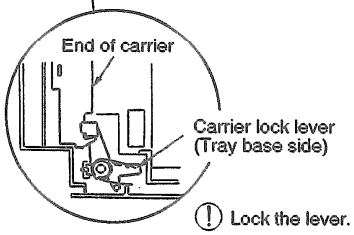


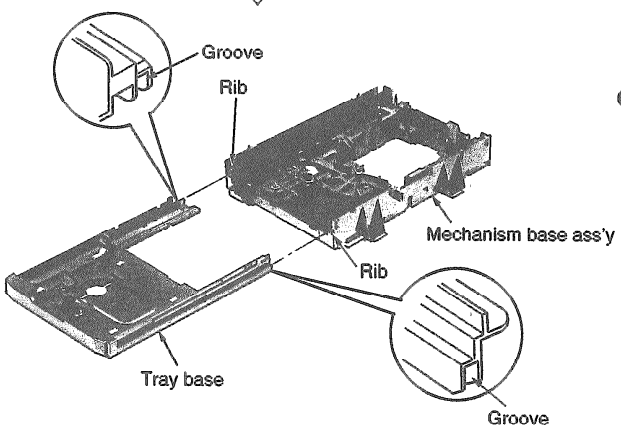


Step 1 Pull the drive rack in the direction of arrow (➡) fully.

Step 2 Slide the carrier in the direction of arrow (➡).

Step 3 Insert the tray base to the mechanism base ass'y with keeping the procedures Step 1 and Step 2 .

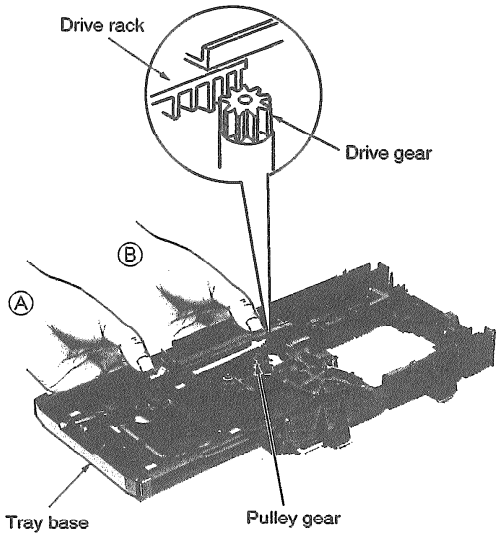


Step 4 ◉ Insert the drive rack until the driver rack interferes with the drive gear.

Position Ⓐ

Step 5 ◉ Rotate the pulley gear clockwise gently by hand (5 or 6 times).

ⓘ When the gear begins to rotate, rotate the pulley gear with finger pressure (position Ⓑ) because the drive rack gear will fall free.

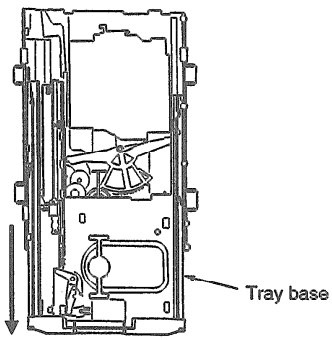


Step 6 Allow the tray base be open manually.

※ Draw the inserted tray base forward.

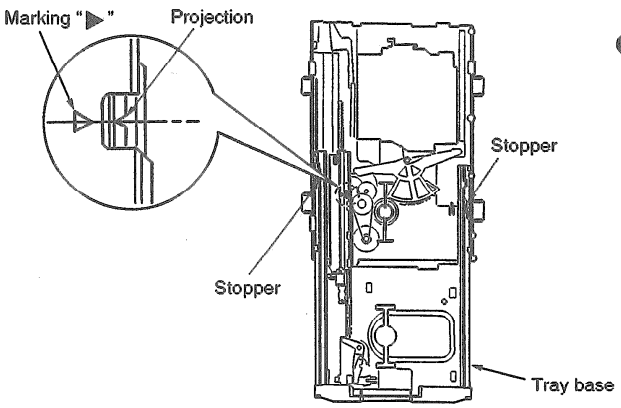


Step 7 Locate the projection at the marking "▶" as shown left.

ⓘ In case that the stated above is not operated draw the tray base again.
(Refer to item ⓘ on page 9)

(Retry the item marked with ◉)

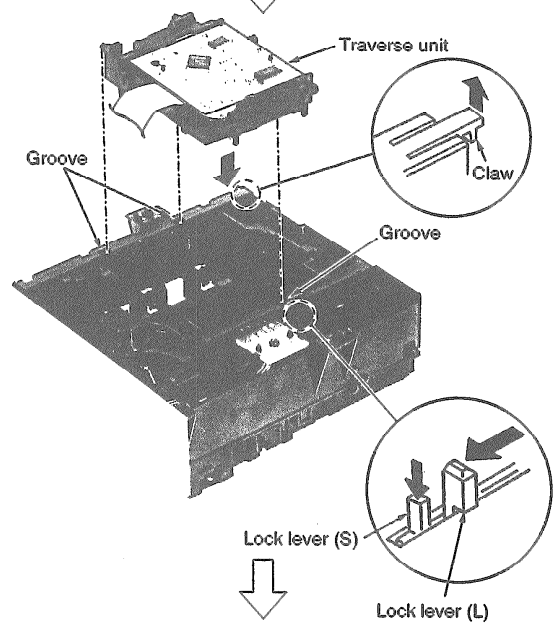


Step 8 While lifting the claw upward, press the lock lever (L) with forcing the lock lever (S).

Step 9 Align the boss of traverse unit with the groove of mechanism base ass'y.

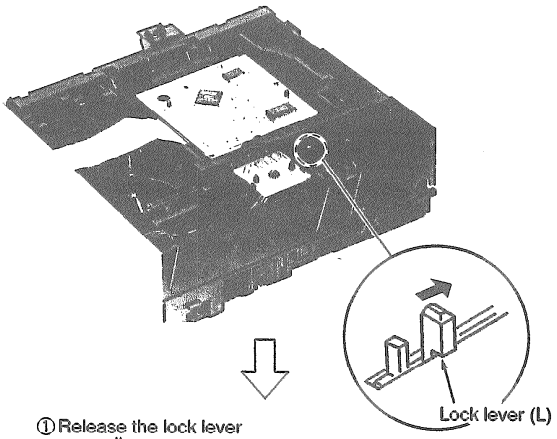


Step 10 Pull the lock lever (L) in the direction of arrow (➡).

After assembly, confirm the traverse unit operation.

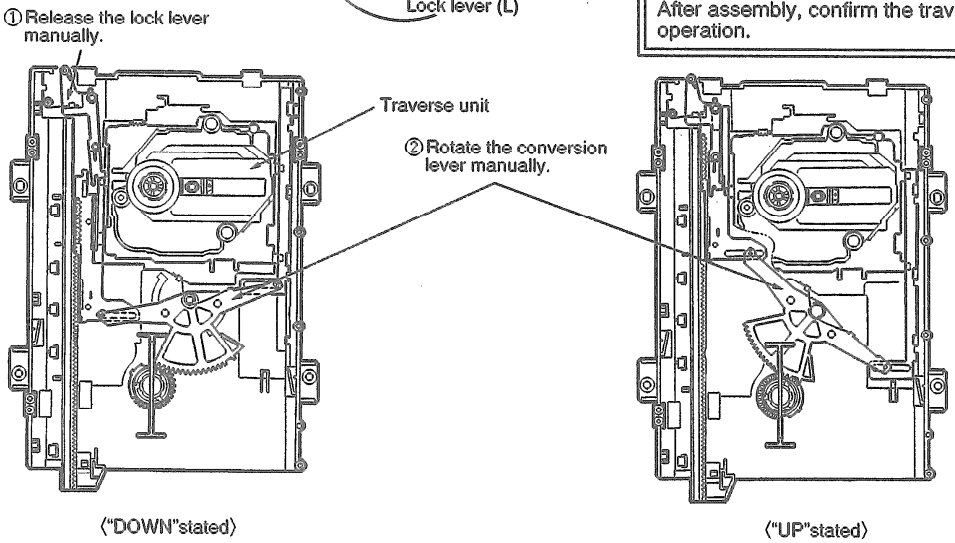

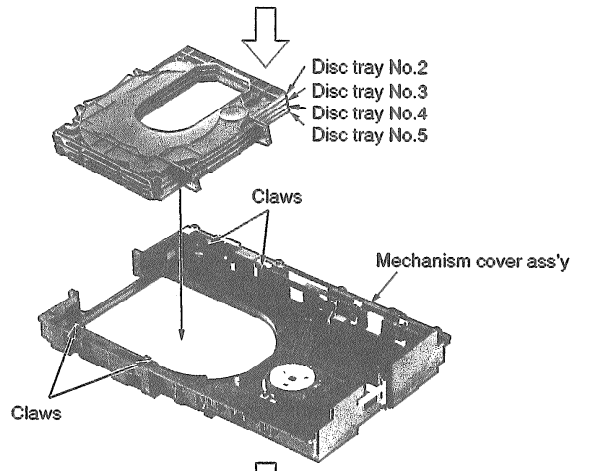


Step 11 Install the 4 disc trays to the mechanism cover ass'y. (Allow them to lock with claws.)

ⓘ Install the disc trays in specific order. (Disc tray No. is indicated on the tray.)

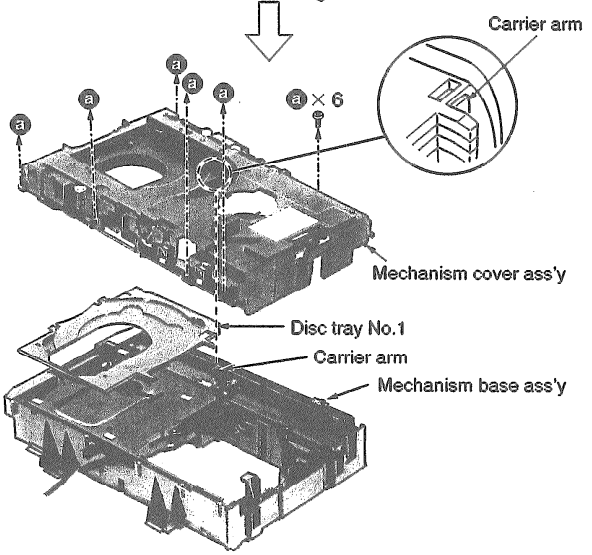


Step 12 Place the disc tray No.1 on the mechanism base ass'y.

Step 13 Install the mechanism cover ass'y.

ⓘ The carrier arm is positioned as shown left.

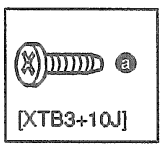


## Inspection for CD changer unit

- Begin the inspections in condition that the traverse is kept from disc tray. (5 disc trays in the store compartment.)

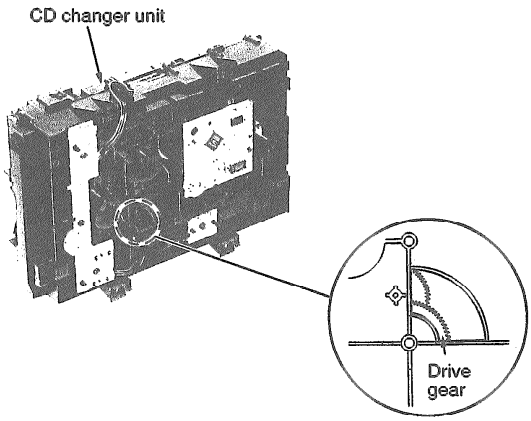


※ Manual operations

① Rotate the drive gear counterclockwise manually.

The traverse runs over the disc tray, and rises at maximum level.

② Rotate the drive gear clockwise manually.

The disc tray moves and is stored in upper compartment.

The tray base is open.

③ Again rotate the drive gear counterclockwise manually.

The tray base is closed, and then it returns to start position.

## Checking Procedures for each P.C.B.

### Checking for the main P.C.B.

Perform the items Step 1 and Step 2 for CD changer removal (Refer to page 6.)

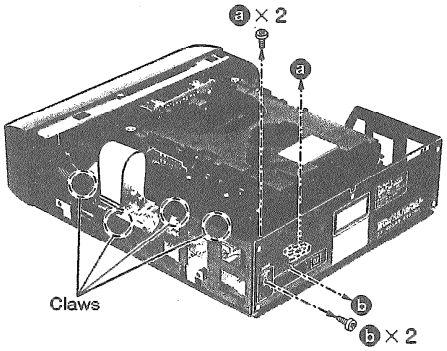


Step 1 Remove the 4 screws.

ⓐ (Black) [XTB3+8JFZ]

ⓑ (Black) [XTBS3+8JFZ1]

Step 2 Remove the 4 claws, and then stand the main P.C.B..

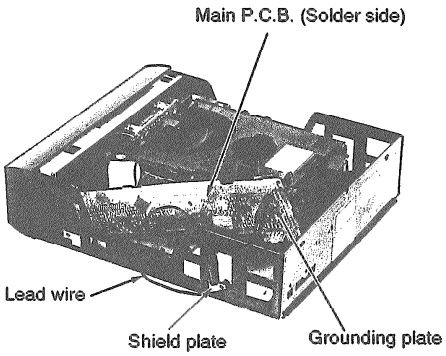


Step 3 Connect the lead wire between the grounding plate and shield plate.

Check the main P.C.B. (solder side) as shown left.

### Checking for the operation P.C.B.

Perform the items Step 1 ~ Step 3 for CD changer removal (Refer to page 6.)

Step 1 Release the 3 claws, and then upset the operation P.C.B..

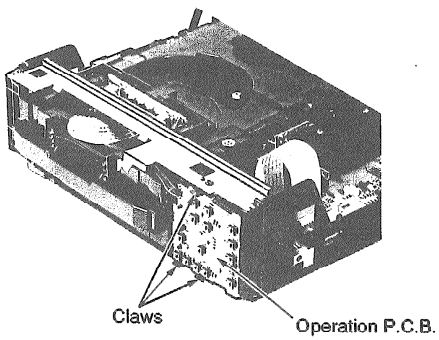

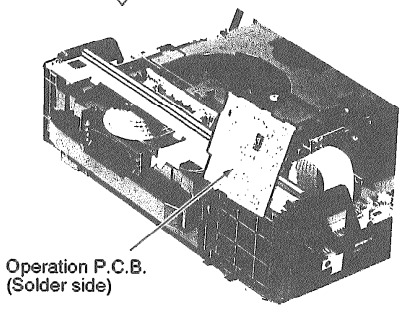


Check the operation P.C.B. (solder side) as shown left.

## Checking for the servo P.C.B.

Perform the items Step 1 ~ Step 8 for CD changer removal (Refer to pages 6 and 7.)

Perform the items Step 1 ~ Step 4 for traverse unit removal (Refer to page 8.)

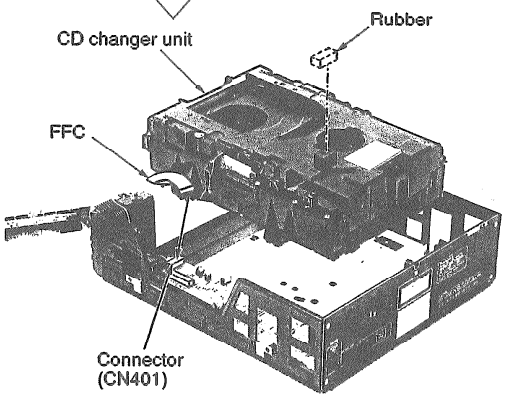


Step 1 Install the CD changer unit to the set.

(!) Screw tighten is not necessary.

Step 2 Connect the FFC to the connector (CN401).

Step 3 Remove the rubber.

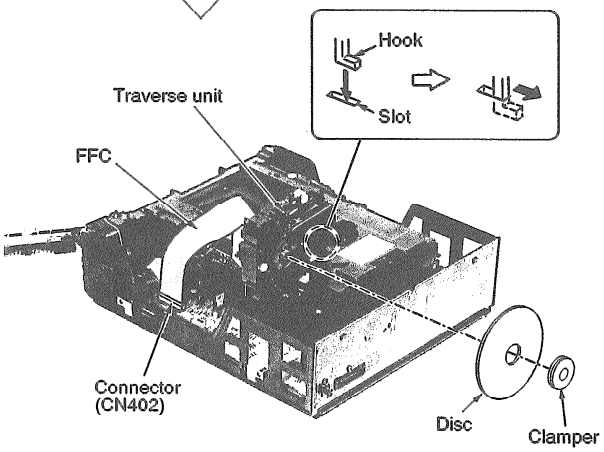


Step 4 Align the hook of traverse unit with the slot, and then stand it.

Step 5 Attach the disc and clamper with magnet to the traverse unit.

(!) Prepare the clamper used ordinaly.

Step 6 Connect the FFC to the connector (CN402).

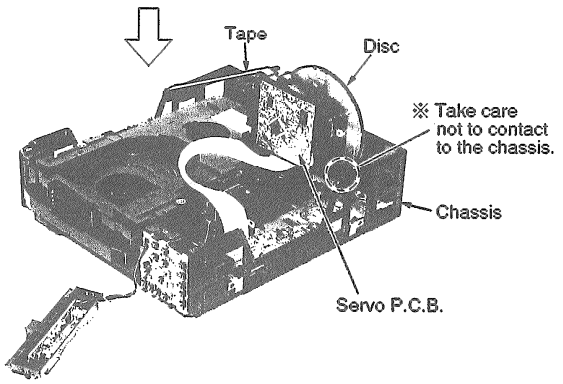


Step 7 Apply the tape between the chassis and traverse unit not to contact the disc with chassis.

Check the servo P.C.B. (solder side) as shown left.

## Main Component Replacement Procedures

### Replacement for the traverse deck ass'y

[XTN2+6G]

[XTV2+6G]

Perform the items Step 1 ~ Step 8 for CD changer removal (Refer to pages 6 and 7.)

Perform the items Step 1 ~ Step 4 for traverse unit removal (Refer to page 8.)

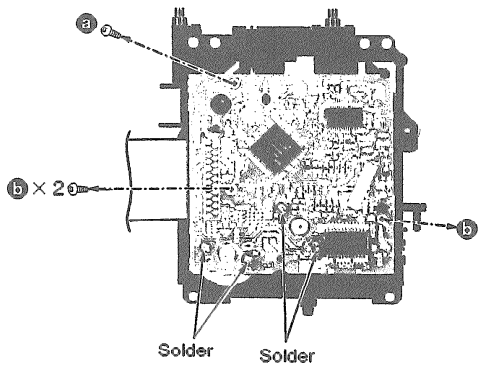


Step 1 Remove the 3 screws.

Step 2 Unsolder the motor terminals.

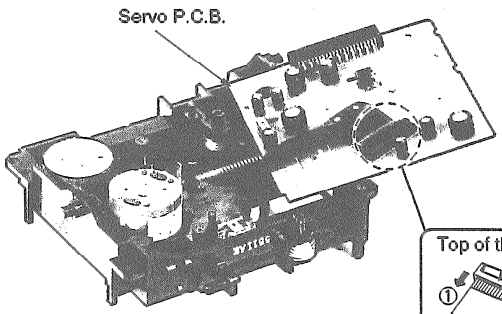


Step 3 Remove the FFC from the connector, and then remove the servo P.C.B..

**Caution:**
Insert a short pin into the traverse unit FFC board.
(Refer to "Hnading Precautions for Traverse Deck" on page 2.)

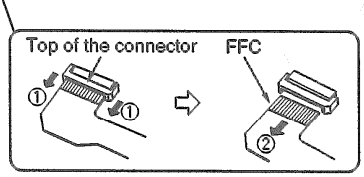


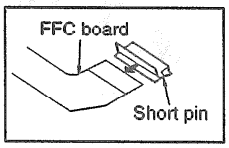

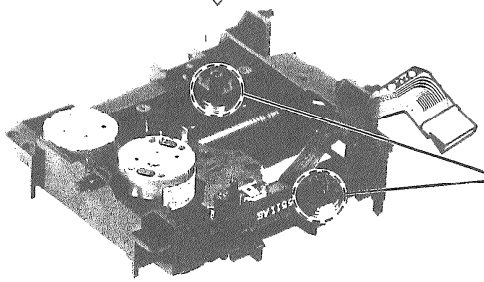

Step 4 Remove the pins.

1. Spread the boss with ⊖ screwdriver.
2. Pull out the pin in the direction of arrow.

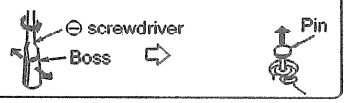


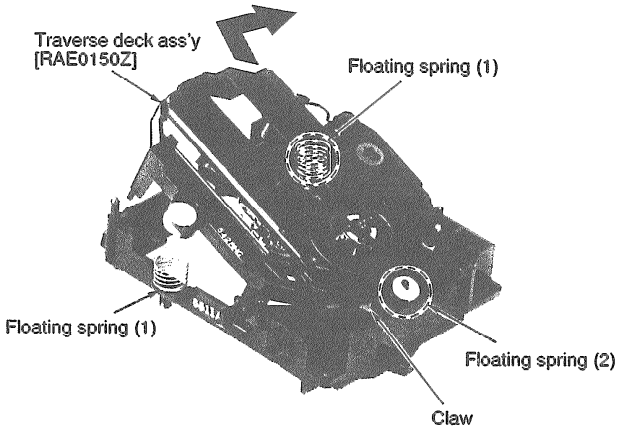


Step 5 Release the claws, and then remove the traverse deck ass'y.

ⓘ Be careful not to lose the 3 springs because those will also be removed on removal of the traverse deck ass'y.

**Installation of the servo P.C.B.**

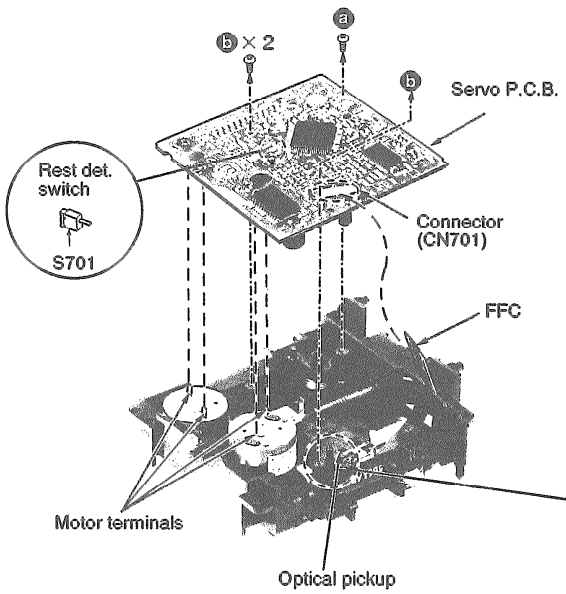


Step 1 Before installing the servo P.C.B., move the optical pickup toward the outer edge from mark "▼".

ⓘ In case that the optical pickup is not moved toward the outer edge from the marking, the rest detect switch (S701) mounted on the servo P.C.B. may be damaged.

Step 2 Connect the FFC to the connector.

Step 3 Install the servo P.C.B., and then tighten screws.

ⓘ After tightening screws, solder each motor terminal.

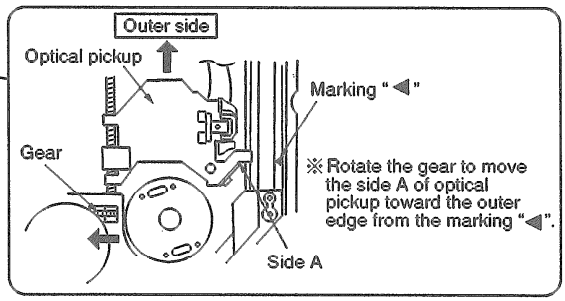


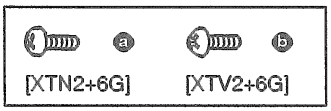

# ■ Error Code Display and Servo Adjustment Function

This unit has an error code display function, so that if the unit operates incorrectly, the fault is displayed using an error code on the FL display of the tuner (ST-CH770). It also has a servo adjustment function for displaying the status of servo system functions (Focus, Tracking, CLV Servo) on the tuner's FL display.
The system control IC and FL display are part of the tuner so make sure the system has been connected properly before using three functions. (This unit can be operated independently, although the error code display and servo adjustment functions cannot be used.)
Use these two functions for guidance during fault diagnosis and repair.

> **Note:**
> **Check beforehand for scratching or soiling of the test disc (SZZP1054C), and soiling or other problems with the pickup lens.**

## ● Error code display procedure

**Automatic adjustment results**

Turn the power ON.
↓
Load the test disc (SZZP1054C).
↓
Hold down the REPEAT button for at least 2 seconds, and then press the STOP button for at least 2 seconds while continuing to hold down the REPEAT button.
↓
A servo section error code is displayed. (See **Table 2**.)
Use this error code display as a guideline for finding the malfunction point in the servo circuitry. If the error code "**E-00**" is displayed, the unit is "OK (No problem)."
↓

**Checking the mechanism switches**

Press the F. SKIP button.
↓
A mechanism OK/NG error code is displayed. (See **Table 1**.)
This error code can be used diagnose whether or not the mechanism is OK. If there are multiple errors, these can be displayed successively by pressing the F. SKIP button.
↓
Remove the disc and turn the power OFF. (The error code display mode is canceled.)

## ● Servo adjustment procedure

Turn the power ON.
↓
Load the test disc (SZZP1054C).
↓
Hold down the REPEAT button for at least 2 seconds, and then press the PAUSE button for at least 2 seconds while continuing to hold down the REPEAT button.
↓
Press the ▶ (PLAY) button, and play for 10 seconds.
↓
Servo adjustment results are displayed.

Focus Tracking CLV servo

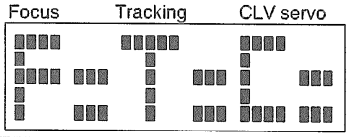

"H" level
"L" level

↓
Remove the disc and turn the power OFF.

(Example)

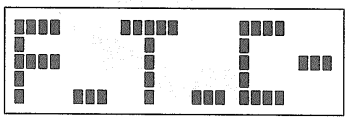

⇒ Normal

| | "L" level | "H" level |
|---|---|---|
| Focus system | normal | defective |
| Tracking system | normal | defective |
| CLV servo system | defective | normal |

## ● Table 1

| FL display | Symptom | Cause |
|---|---|---|
| H-15 | When CD tray opens, it closes by itself. | Disc tray "Open" detection switch (S4) fault. |
| H-16 | When CD tray close, it opens by itself. | |
| F-15 | Does not play, even when CD play button is pressed. | Pickup rest position detection switch (S701) fault. |
| F-16 | Traverse pushes up disc tray. | Up position detection switch (S3) fault. |
| F-26 | Does not move even when " ▶ " (PLAY) button is pressed. | System control or servo processor IC (IC401, IC702) fault. |
| F-27 | Tray keeps moving for a while, or selected tray does not open. | Disc number detection switch (S5) fault. |
| F-28 | | Stocker position detection, or play position detection switch (S1, S2) fault |
| F-75 | NO DISC is displayed and unit does not play, even when a CD is loaded. | CD circuit power supply problem. |

## ● Table 2

※ The unit is satisfactory if the error code is **"E-00"** or **"E02"**.
※ Before testing, check that the test disc is free of scratches and optical pickup is clean.

| FL error code display | Symptom | Probable cause | Signal to check | | Normal voltage and waveform values | |
|---|---|---|---|---|---|---|
| | | | Location | Signal name | PLAY | STOP |
| E-01 | Focus and tracking offset adjustments not completed in specified time period. | ①Clocks X1 and X2, power supply VDD, and reset (/RST), all on IC702.<br>②MDATA, MCLK, MLD, and SENSE signals to/from mechanism controller. | IC702 ⑧ pin | MDATA | PLAY 5 V 0 V T=13.6 ms. | 0 V |
| | | | IC702 ⑦ pin | MCLK | PLAY 5 V 0 V T=13.6 ms. | 4.8 V |
| | | | IC702 ⑨ pin | MLD | | |
| | | | IC702 ⑩ pin | SENSE | 0 V | 0 V |
| | | | IC702 ⑱ pin | /RST | 4.9 V | 4.9 V |
| | | | IC702 ㊽ pin | X1 | 1.9 Vp-p F=16.9344 MHz | 1.9 Vp-p F=16.9344 MHz |
| | | | IC702 ㊾ pin | X2 | 5.6 Vp-p F=16.9344 MHz | 5.6 Vp-p F=16.9344 MHz |
| E-03<br>E-05<br>E-07<br>E-09<br>E-0B<br>E-0D<br>E-0F | Disc play unstable | ①Scratches or contaminants on disc surface<br>②Focus and Tracking servo circuits (check waveforms, voltages, and part values.)<br>③Spindle driver circuit<br>④Optical pickup | IC702 ㉜ pin | F E | PLAY 0.3 Vp-p 2 ms. 0.1 V/DIV. | 2.5 V |
| | | | IC702 ㉝ pin | T E | PLAY 0.4 Vp-p 2 ms. 0.2 V/DIV. | 2.5 V |
| | | | IC702 ㉘ pin | FOD | 2.5 V | 2.5 V |
| | | | IC702 ㉗ pin | TRD | 2.5 V | 2.5 V |
| | | | IC702 ㉖ pin | KICK | 2.5 V | 2.5 V |
| | | | IC702 ⑪ pin | /FLOCK | 0 V | 4.9 V |
| | | | IC702 ㊳ pin | /RF DET | 0 V | 4.9 V |
| | | | TJ701 | R F | PLAY 1.2 Vp-p 0.5 μs. 0.2 V/DIN | 2.4 V |
| | | | IC702 ⑰ pin | STAT | 4.9 V | 0 V |
| E-04<br>E-06<br>E-0C<br>E-0E | Best "eye" (PD balance) adjustment not completed in specified time period. | ①Scratches or contaminants on disc surface<br>②Focus servo circuit (check waveforms, voltages, and part values.)<br>③Optical pickup | IC702 ㉚ pin | FBAL | 2.5 V ± 1.25 V | 2.5 V ± 1.25 V |
| | | | TJ701 | R F | PLAY 1.2 Vp-p 0.5 μs. 0.2 V/DIN | 2.4 V |
| | | | IC702 ㉜ pin | F E | PLAY 0.3 Vp-p 2 ms. 0.1 V/DIV. | 2.5 V |
| | | | IC702 ㊱ pin | O F T | 0 V | 0 V |
| | | | IC702 ⑫ pin | /TLOCK | 0 V | 0 V |
| E-08<br>E-0A | Focus or Tracking gain adjustment not completed in specified time period. | ①Scratches or contaminants on disc surface<br>②Focus servo circuit (check waveforms, voltages, and part values.)<br>③Optical pickup | IC702 ㉜ pin | F E | PLAY 0.3 Vp-p 2 ms. 0.1 V/DIV. | 2.5 V |
| | | | IC702 ㉝ pin | T E | PLAY 0.4 Vp-p 2 ms. 0.2 V/DIV. | 2.5 V |
| | | | IC702 ㊱ pin | O F T | 0 V | 0 V |
| | | | IC702 ⑫ pin | /TLOCK | 0 V | 0 V |

# ■ To Supply Power Source

**Cautions:**
- It is very dangerous to look at or touch the laser beam. (Laser radiation is invisible.)
  With the unit turned "on", laser radiation is emitted from the pickup lens.
- Avoid exposure to the laser beam, especially when performing adjustments.

This unit SL-CH770 is designed to operate on power supplied from the Amplifier SE-CH770 through the Tuner/Sound Processor ST-CH770.
When connecting the unit to other system components, do not connect to the Amplifier SE-CH770 directly. Be sure to connect this unit through the Tuner/Sound Processor ST-CH770.
When operating the unit SL-CH770 alone for testing and servicing, without having power supplied from the Amplifier SE-CH770 and the Tuner/Sound Processor ST-CH770, use the following method.

## Power Supply to This Unit Alone

1. Short-circuit the section between jumper **J13** and jumper **J14** (**TEST MODE**).
2. Apply 11V AC power to the section between **AC IN** of the diode **D1** and the jumper **J3** ( **GND** ) as well as the section between **AC IN** of the diode **D2** and the jumper **J3** ( **GND** ) . **(Shown in Fig. 1)**

## Operating the Unit Alone

When this unit is operated, alone without system connection to other units, the switches on the front panel remain inoperative. To oprate the switches, follow the procedure below.
1. Short-circuit the section between jumper **J11** and jumper **J12** (**REF-M**).
2. Short-circuit the section between jumper **J15** and jumper **J16** (**KEY 2**).

## To Check Signals

Connect the oscilloscope or the speaker with built-in amplifier to the section between LINE OUT (Lch) of the resistor **R447** and the GND point of the jumper **J3** as well as the section between LINE OUT (Rch) of the resistor **R448** and the GND point of the jumper **J3** and check if the signals are outputting from this unit. **(Shown in Fig. 1)**

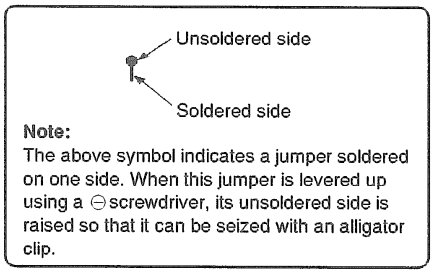


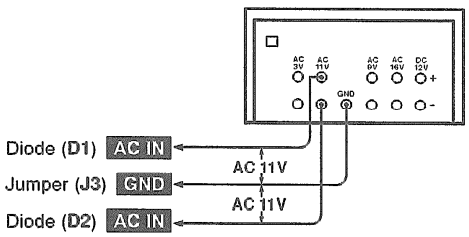


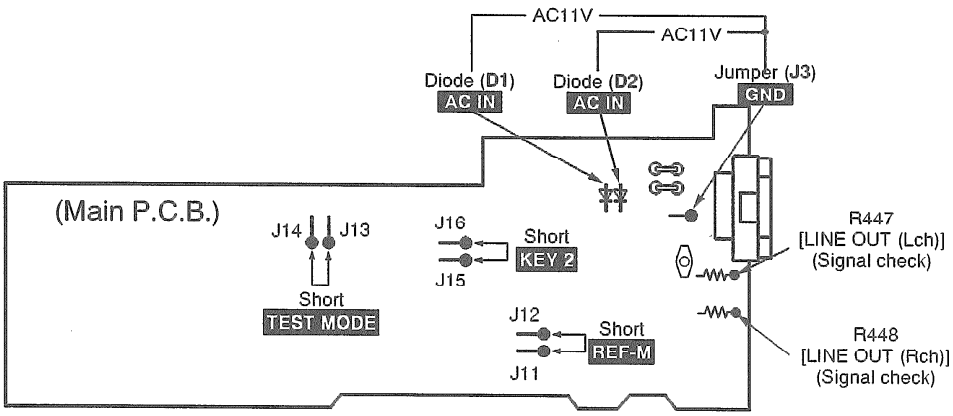


**Fig. 1**

# Schematic Diagram


| | | Page |
|---|---|---|
| A | SERVO CIRCUIT | 22, 23 |
| B | SWITCH CIRCUIT | 24 |
| C | SWITCH (S2, S3) CIRCUIT | 24 |
| D | LED CIRCUIT | 24 |
| E | LOADING MOTOR CIRCUIT | 24 |
| F | OPERATION CIRCUIT | 24 |
| G | MAIN CIRCUIT | 24, 25 |


- This schematic diagram may be modified at any time with the development of new technology.

**Notes:**

- **S1** : Stocker position detect switch
- **S2** : Play position detect switch
- **S3** : Up position detect switch
- **S4** : Tray open detect switch
- **S5** : Disc number detect switch
- **S601** : Disc select switch (DISC 5)
- **S602** : Disc select switch (DISC 4)
- **S603** : Disc select switch (DISC 3)
- **S604** : Disc select switch (DISC 2)
- **S605** : Disc select switch (DISC 1)
- **S606** : Disc check switch (DISC CHECK)
- **S607** : Repeat switch (REPEAT)
- **S608** : AI edit switch (AI EDIT)
- **S609** : Random play switch (RANDOM)
- **S610** : R. Skip/Search switch (⏮/◀◀)
- **S611** : Stop switch (□)
- **S612** : Play switch (▷)
- **S613** : F. Skip/Search switch (▶▶/⏭)
- **S614** : Pause switch (❚❚)
- **S615** : Disc tray open/close switch (⏏ OPEN/CLOSE)
- **S701** : Rest switch

- Indicated voltage values are the standard values for the unit measured by the DC electronic circuit tester (high-impedance) with the chassis taken as standard. Therefore, there may exist some errors in the voltage values, depending on the internal impedance of the DC circuit tester.

  No mark : CD STOP
  ( ) : CD PLAY [1kHz, L + R, 0 dB]

- Important safety notice:
  Components identified by ⚠ mark have special characteristics important for safety.
  Furthermore, special parts which have purposes of fire-retardant (resistors), high-quality sound (capacitors), low-noise (resistors), etc. are used. When replacing any of components, be sure to use only manufacturer's specified parts shown in the parts list.

- **Caution!**
  IC and LSI are sensitive to static electricity.
  Secondary trouble can be prevented by taking care during repair.
  Cover the parts boxes made of plastics with aluminum foil.
  Ground the soldering iron.
  Put a conductive mat on the work table.
  Do not touch the legs of IC or LSI with the fingers directly.

- **Voltage and signal line**
  ▬▶ : Positive voltage line
  ⇨ : CD signal Line

## A SERVO CIRCUIT
(P.C.Board : on page 26)

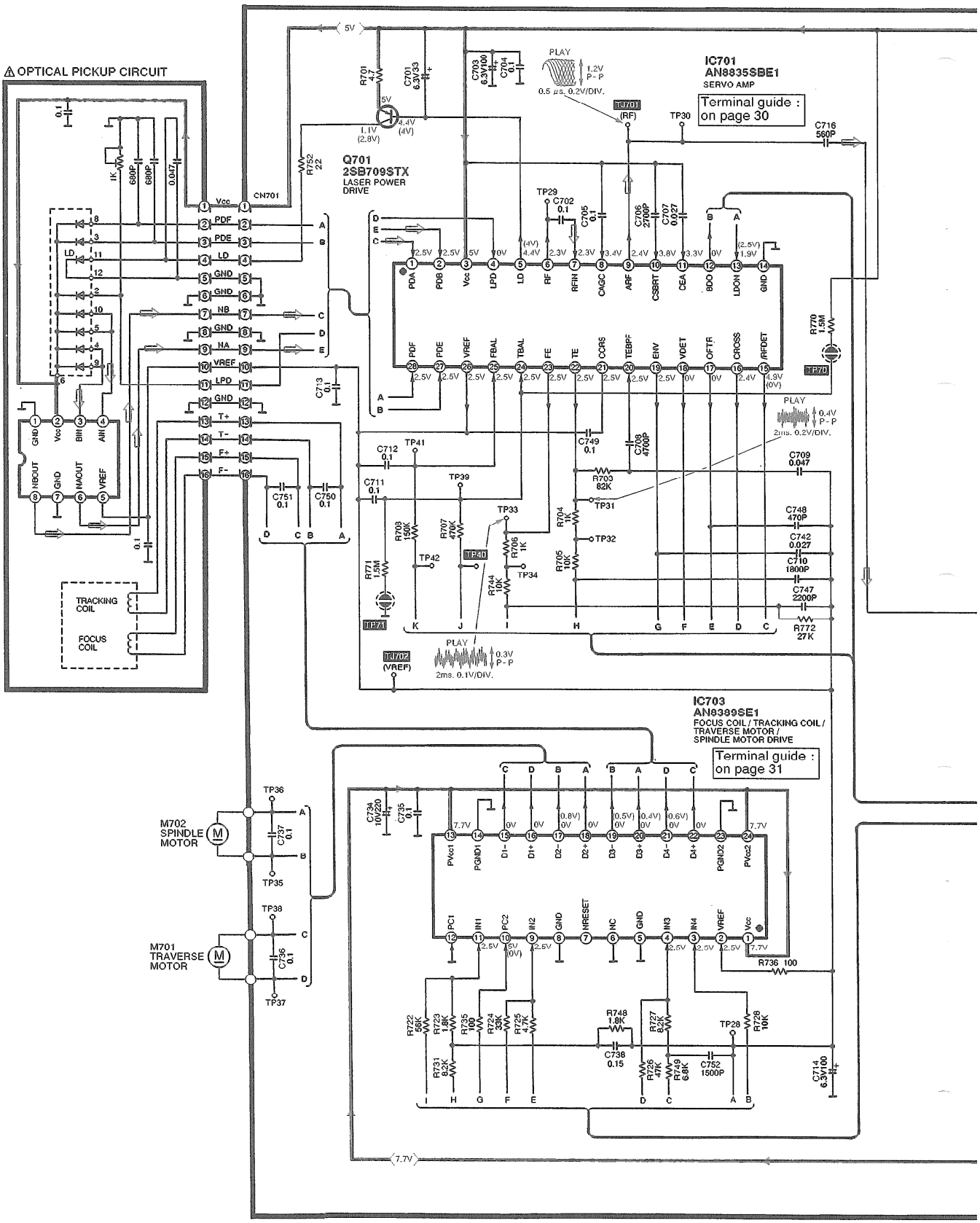

: Positive voltage line  : CD signal Line

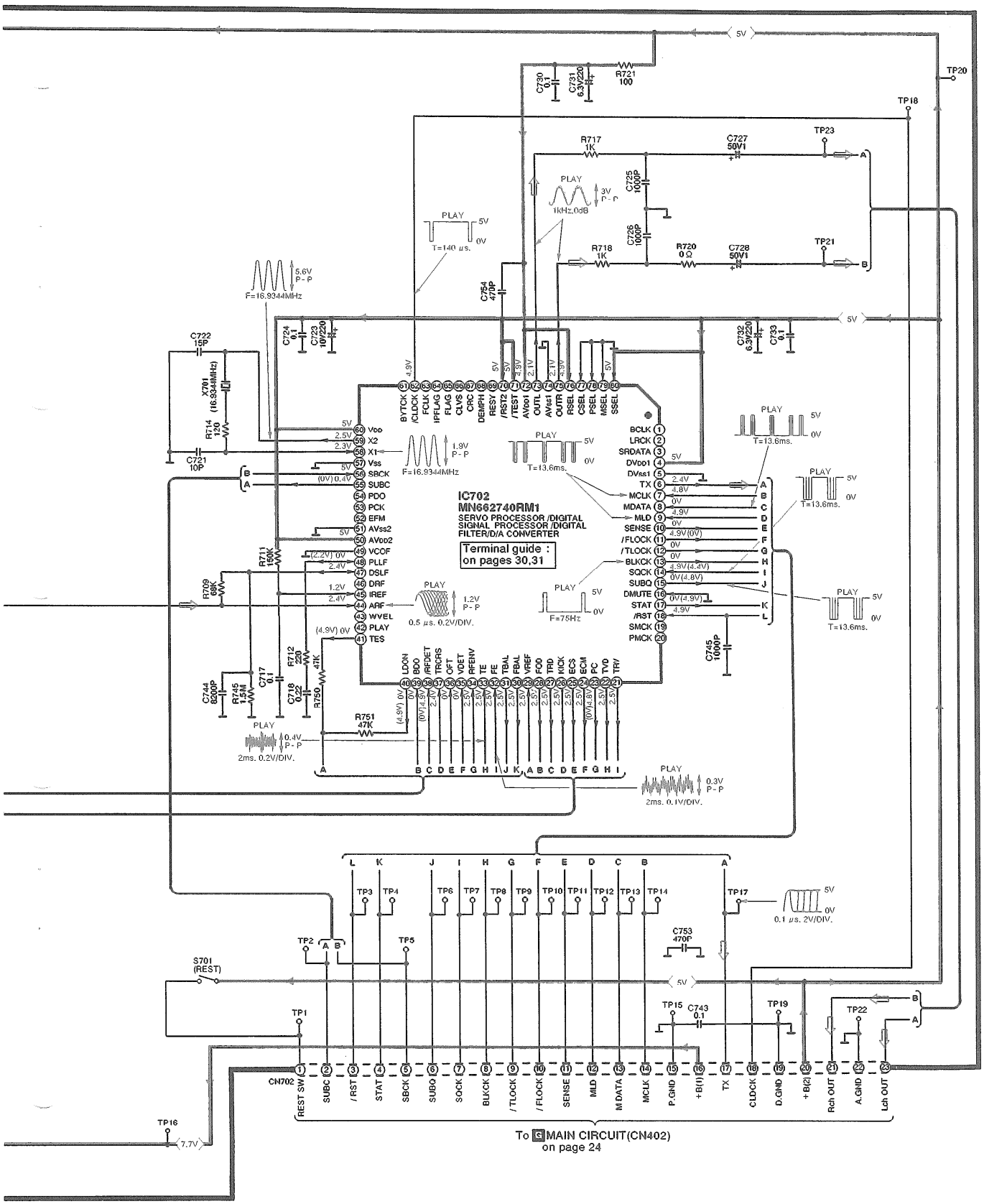

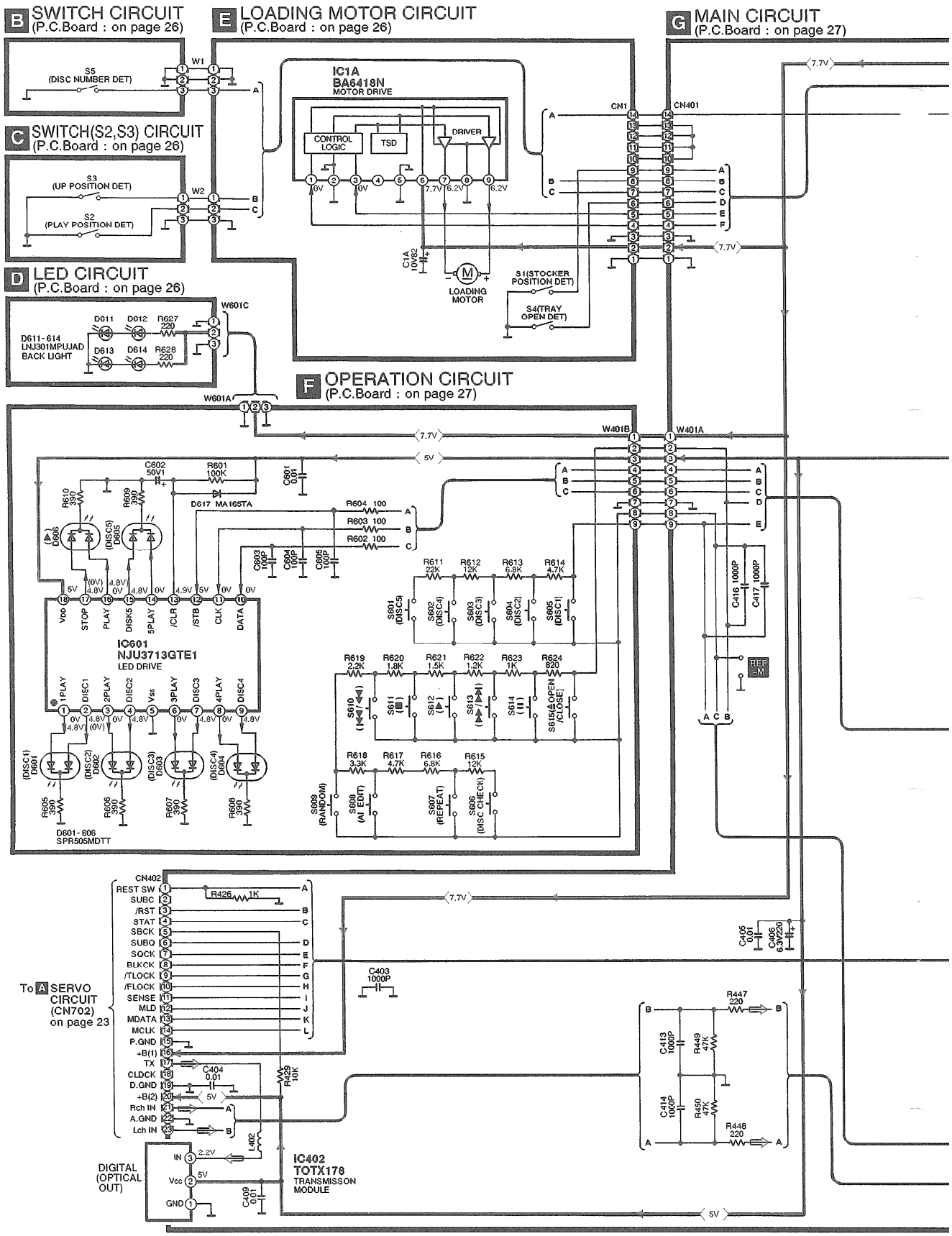
B SWITCH CIRCUIT
(P.C.Board : on page 26)
E LOADING MOTOR CIRCUIT
(P.C.Board : on page 26)
G MAIN CIRCUIT
(P.C.Board : on page 27)
C SWITCH(S2,S3) CIRCUIT
(P.C.Board : on page 26)
D LED CIRCUIT
(P.C.Board : on page 26)
F OPERATION CIRCUIT
(P.C.Board : on page 27)
S5
(DISC NUMBER DET)
S3
(UP POSITION DET)
S2
(PLAY POSITION DET)
IC1A
BA6418N
MOTOR DRIVE
CONTROL LOGIC
TSD
DRIVER
LOADING MOTOR
S1(STOCKER POSITION DET)
S4(TRAY OPEN DET)
D611-614
LNJ301MPUJAD
BACK LIGHT
IC601
NJU3713GTE1
LED DRIVE
D601-606
SPR505MDTT
To A SERVO CIRCUIT
(CN702)
on page 23
DIGITAL
(OPTICAL
OUT)
IC402
TOTX178
TRANSMISSON
MODULE

: Positive voltage line  : CD signal Line

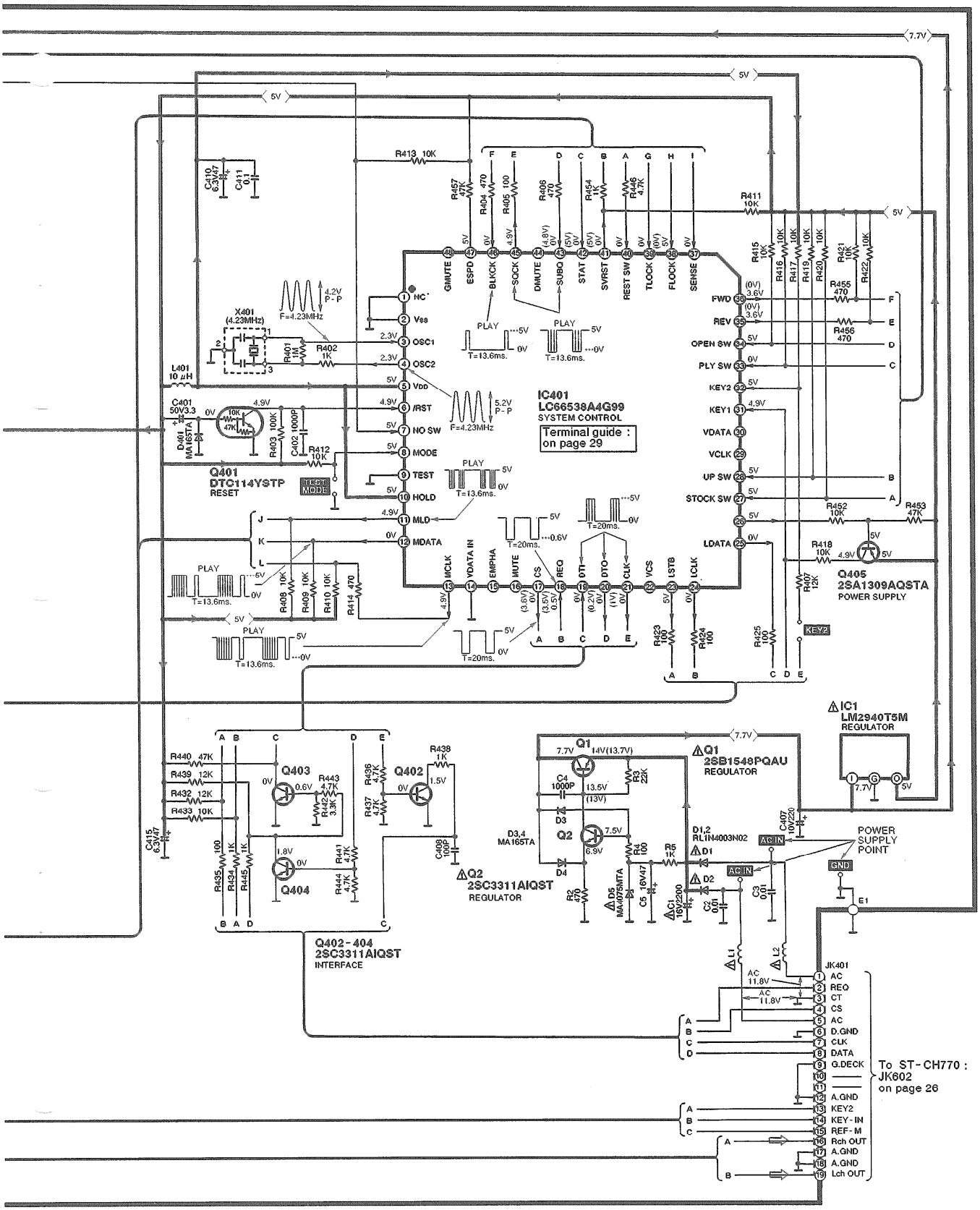

# ■ Printed Circuit Board Diagram

- This circuit board diagram may be modified at any time with the development of new technology.

## A SERVO P.C.B. (REP2144B–N)

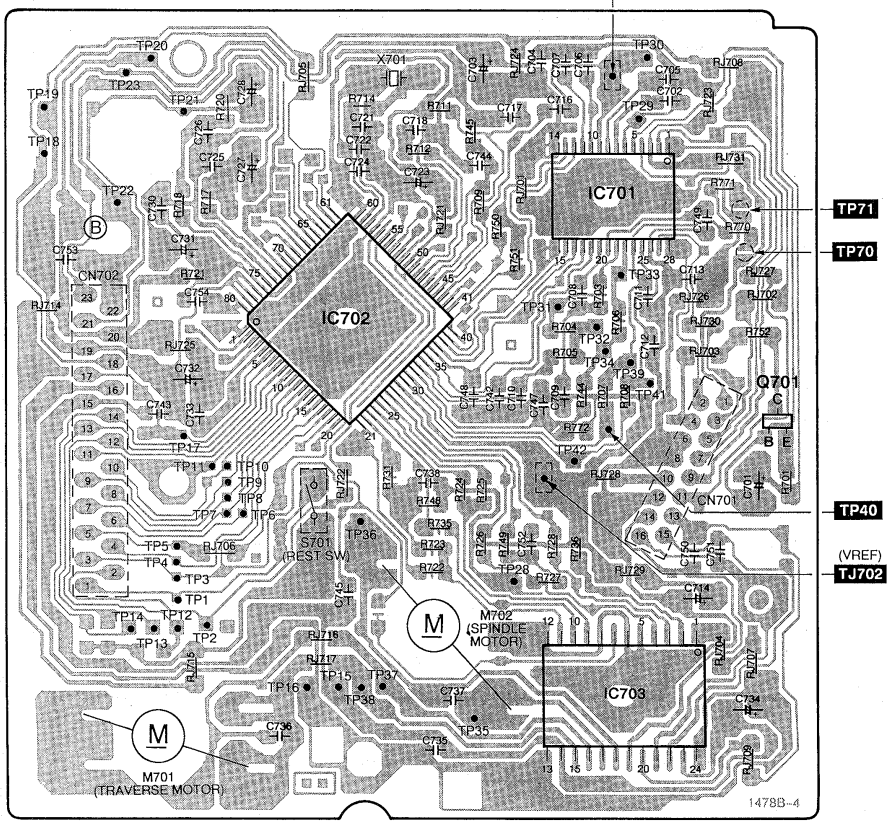


## D LED P.C.B. (REP2292B–M)

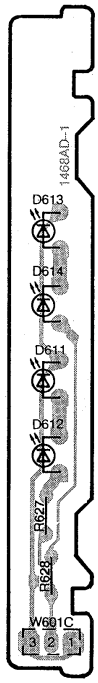


## B SWITCH P.C.B. (REP2182A–N)

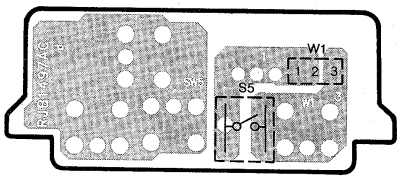


## C SWITCH (S2,S3) P.C.B. (REP2182A–N)

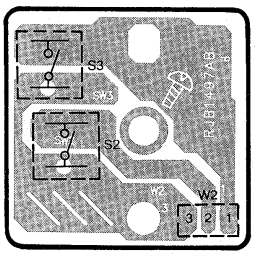


## E LOADING MOTOR P.C.B. (REP2182A–N)

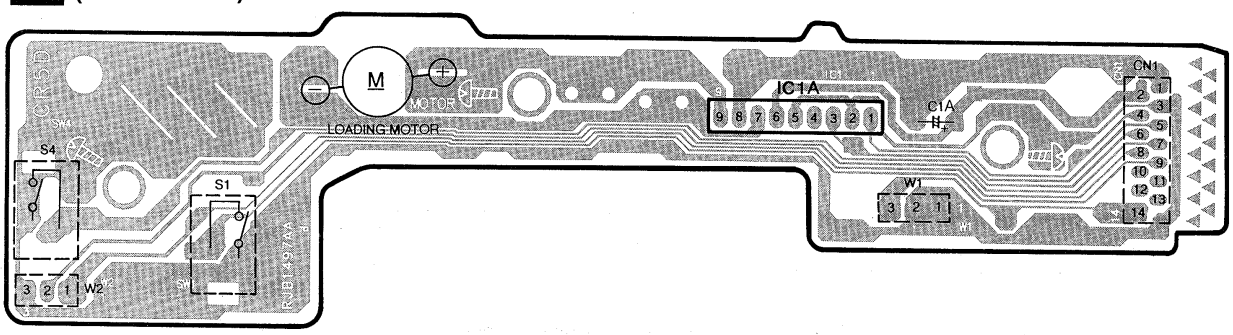

## G MAIN P.C.B. (REP2292B–M)

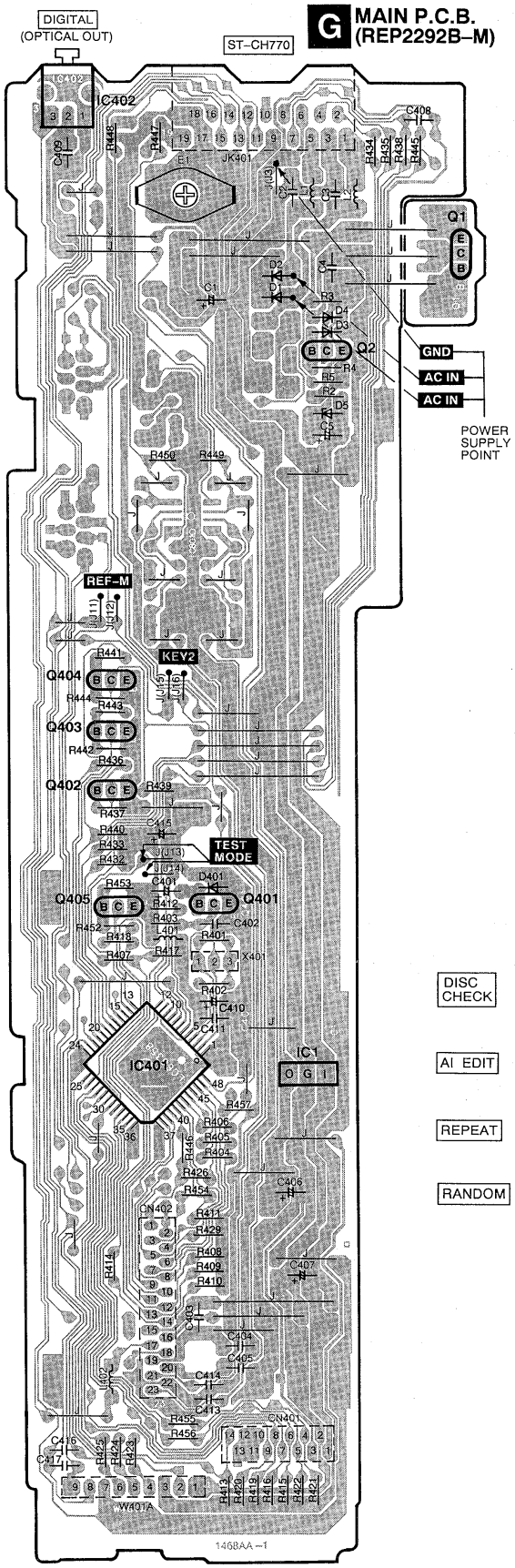


## F OPERATION P.C.B. (REP2292B–M)

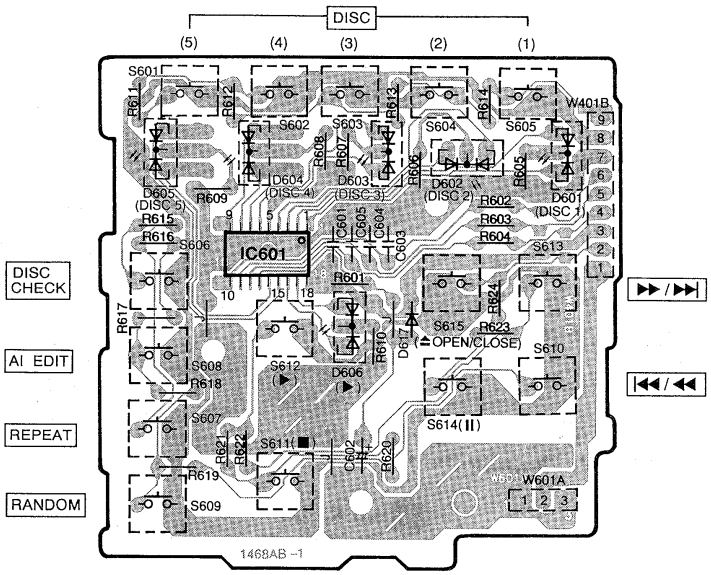

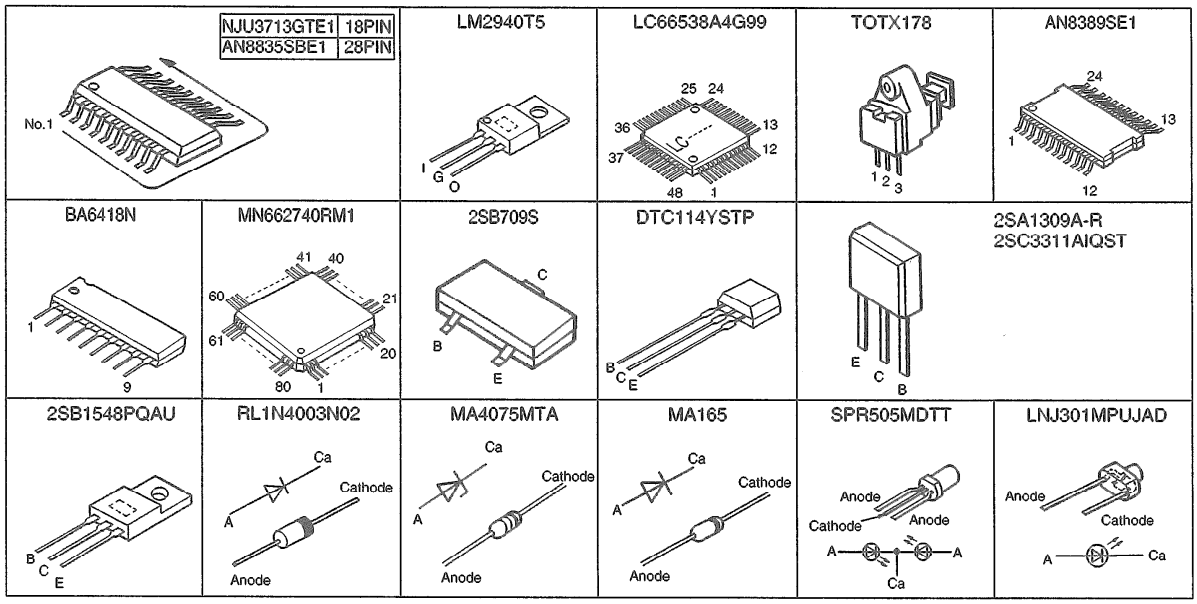


## Wiring Connection Diagram

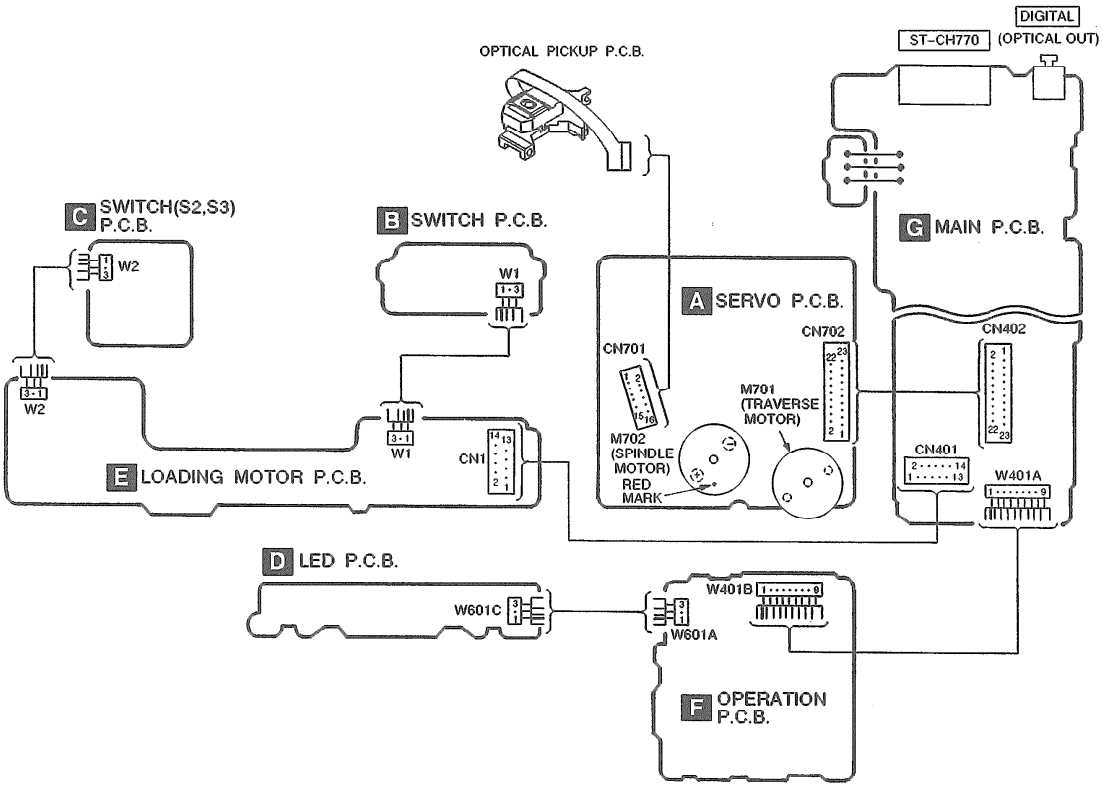

# ■ Function of IC Terminals

## ● IC401 (LC66538A4G99)

| Pin No. | Terminal Name | I/O | Function |
|---|---|---|---|
| 1 | NC | — | No used, connected to GND |
| 2 | VSS | — | GND terminal |
| 3 | OSC1 | I | Crystal oscillating circuit input (f = 4.23 MHz) |
| 4 | OSC2 | O | Crystal oscillating circuit output (f = 4.23 MHz) |
| 5 | VDD | I | Power supply (+5 V) |
| 6 | /RST | I | Reset signal input ("L": reset) |
| 7 | NO SW | I | Disc tray number detection signal input |
| 8 | MODE | I | Test mode signal input |
| 9 | TEST | — | Test terminal |
| 10 | HOLD | I | No used, connected to power supply |
| 11 | MLD | O | Command load signal output |
| 12 | MDATA | O | Command data signal output |
| 13 | MCLK | O | Command clock signal output |
| 14 | VDATA IN | — | No used, connected to GND |
| 15 | EMPHA | — | No used, open |
| 16 | MUTE | — | No used, open |
| 17 | CS | O | Communication request signal output to ST-CH770 |
| 18 | REQ | I | Communication request signal input from ST-CH770 |
| 19 | DTI | I | Communication data signal input from ST-CH770 |
| 20 | DTO | O | Communication data signal output to ST-CH770 |
| 21 | CLK | O | Communication clock signal output to ST-CH770 |
| 22 | VCS | — | No used, open |
| 23 | LSTB | O | LED drive signal output |
| 24 | LCLK | O | LED drive command clock signal output |
| 25 | LDATA | O | LED drive command data signal output |
| 26 | — | — | No used, connected to power supply |
| 27 | STOCK SW | I | Stocker position detection signal input |
| 28 | UP SW | I | Disc tray up position detection signal input |
| 29 | VCLK | — | No used, open |
| 30 | VDATA | — | No used, open |
| 31 | KEY1 | I | Key switch detection signal input |
| 32 | KEY2 | I | Key switch detection signal input |

| Pin No. | Terminal Name | I/O | Function |
|---|---|---|---|
| 33 | PLY SW | I | Disc tray play position detection signal input |
| 34 | OPEN SW | I | Disc tray open position detection signal input |
| 35 | REV | O | Loading motor drive (reverse) signal output |
| 36 | FWD | O | Loading motor drive (forward) signal output |
| 37 | SENSE | I | Sense signal input |
| 38 | FLOCK | I | Focus servo feeding signal input ("L": Feed) |
| 39 | TLOCK | I | Tracking servo feeding signal input ("L": Feed) |
| 40 | REST SW | I | Rest position detection signal input |
| 41 | SVRST | O | Reset signal output to IC702 |
| 42 | STAT | I | Status signal input |
| 43 | SUBQ | I | Sub-code Q code input |
| 44 | DMUTE | — | No used, open |
| 45 | SQCK | O | Sub-code Q resister clock signal output |
| 46 | BLKCK | I | Sub-code block clock signal input (fBLKCK = 75 Hz during normal playback) |
| 47 | ESPD | — | No used, connected to power supply |
| 48 | GMUTE | — | No used, open |

## ● IC701 (AN8835SBE1)

| Pin No. | Terminal Name | I/O | Function |
|---|---|---|---|
| 1 | PDA | I | Focus (A-ch) signal input terminal |
| 2 | PDB | I | Focus (B-ch) signal input terminal |
| 3 | VCC | I | Power supply terminal |
| 4 | LPD | I | Laser PD signal input |
| 5 | LD | O | Laser power auto control signal output |
| 6 | RF | O | RF amp. terminal |
| 7 | RF IN | I | AGC input terminal |
| 8 | CAGC | I | AGC detection capacitor input |
| 9 | ARF | O | RF signal output |
| 10 | CSBRT | I | OFTR capacitor connection terminal |
| 11 | CWA | I | HPF-AMP capacitor connection terminal |
| 12 | BDO | O | Dropout detection control signal output |
| 13 | LDON | I | LD APC ON/OFF ("H": ON, "L": OFF) |
| 14 | GND | — | GND terminal |
| 15 | /RFDET | O | RF detection signal output ("L": det.) |
| 16 | CROSS | O | Tracking error zero cross output |
| 17 | OFTR | O | Off track detection signal output ("H": det.) |
| 18 | VDET | O | Vibration detection signal output ("H": det.) |
| 19 | ENV | O | Envelope output terminal |
| 20 | TEBPF | I | Vibration detection signal input ("H": det.) |
| 21 | CCRS | I | CROSS capacitor connection terminal |
| 22 | TE | O | Tracking error signal output |
| 23 | FE | O | Focus error signal output |
| 24 | TBAL | I | Tracking balance adjustment signal input |
| 25 | FBAL | I | Focus balance adjustment signal input |
| 26 | VREF | O | Reference voltage output |
| 27 | PDE | I | Tracking signal (E-ch) input terminal |
| 28 | PDF | I | Tracking signal (F-ch) input terminal |

## ● IC702 (MN662740RM1)

| Pin No. | Terminal Name | I/O | Function |
|---|---|---|---|
| 1 | BCLK | O | Bit clock output for serial data (no used, open) |
| 2 | LRCK | — | L/R identification signal output (no used, open) |
| 3 | SRDATA | — | Serial data output (no used, open) |
| 4 | DVDD1 | — | Power supply input (for digital circuit) |
| 5 | DVss1 | — | GND (for digital circuit) |
| 6 | TX | O | Digital audio interface signal output |
| 7 | MCLK | I | Microprocessor command clock signal input (Latches data at first transition) |
| 8 | MDATA | I | Microprocessor command data signal input |
| 9 | MLD | I | Microprocessor command load signal input |
| 10 | SENSE | O | Sense signal output (OFT, FESL, MAGEND, NAJEND, POSAD, SFG) |
| 11 | /FLOCK | O | Focus servo feeding signal output ("L": Feed) |
| 12 | /TLOCK | O | Tracking servo feeding signal output ("L": Feed) |
| 13 | BLKCK | O | Sub-code block clock signal output (fBLKCK = 75 Hz during normal playback) |
| 14 | SQCK | I | External clock signal input for sub-code Q resister |
| 15 | SUBQ | O | Sub-code Q code output |
| 16 | DMUTE | I | Muting input ("H": Mute) |
| 17 | STAT | O | Status signal output (CRC, CUE, CLVS, TTSTVP, FCLV, SQCK) |
| 18 | /RST | I | Reset signal input |
| 19 | SMCK | — | 1/2-divided clock signal of crystal oscillating at MSEL = "H" (fSMCK = 8.4672 MHz) 1/4-divided clock signal of crystal oscillating at MSEL = "L" (fSMCK = 4.2336 MHz) (no used, open) |
| 20 | PMCK | — | 1/192-divided clock signal of crystal oscillating (fPMCK = 88.2 kHz) (no used, open) |
| 21 | TRV | O | Traverse forced feed output |
| 22 | TVD | O | Traverse drive output |
| 23 | PC | O | Spindle motor ON signal output ("L": ON) |
| 24 | ECM | O | Spindle motor drive signal output (forced mode output) |
| 25 | ECS | O | Spindle motor drive signal output (servo error signal output) |
| 26 | KICK | O | Kick pulse output |
| 27 | TRD | O | Tracking drive output |
| 28 | FOD | O | Focus drive output |
| 29 | VREF | I | D/A (drive) output (TVD, ECS, TRD, FOD, FBAL, TBAL) reference voltage input |
| 30 | FBAL | O | Focus balance adjustment output |
| 31 | TBAL | O | Tracking balance adjustment output |
| 32 | FE | I | Focus error signal input (analog input) |
| 33 | TE | I | Tracking error signal input (analog input) |
| 34 | RFENV | I | RF envelope signal input |
| 35 | VDET | I | Vibration detection signal input ("H": detection) |

## IC702 Continued

| Pin No. | Terminal Name | I/O | Function |
|---|---|---|---|
| 36 | OFT | I | Off-track signal input ("H": off track) |
| 37 | TRCRS | I | Track cross signal input |
| 38 | /RFDET | I | RF detection signal input ("L": detection) |
| 39 | BDO | I | Dropout signal input ("H": Dropout) |
| 40 | LDON | O | Laser on signal output ("H": ON) |
| 41 | TES | O | Tracking error shunt signal output ("H": shunt) |
| 42 | PLAY | O | Play signal out ("H": PLAY) (no used, open) |
| 43 | WVEL | O | Double speed status signal output ("H": Double speed) (no used, open) |
| 44 | ARF | I | RF signal input |
| 45 | IREF | I | Reference current input |
| 46 | DRF | — | DSL bias (no used, open) |
| 47 | DSLF | I/O | DSL loop filter |
| 48 | PLLF | I/O | PLL loop filter |
| 49 | VCOF | I/O | VCO loop filter |
| 50 | AVDD2 | — | Power supply input (for analog circuit) |
| 51 | AVss2 | — | GND (for analog circuit) |
| 52 | EFM | — | EFM signal output (no used, open) |
| 53 | PCK | — | PLL extraction clock output (fPCK= 4.321 MHz during normal playback) (no used, open) |
| 54 | PDO | — | Phase comparison signal of EFM and PCK signals (no used, open) |
| 55 | SUBC | O | Sub-code serial data output |
| 56 | SBCK | I | Clock input for sub-code serial data |
| 57 | Vss | — | GND |
| 58 | X1 | I | Crystal oscillating circuit input (f = 16.9344 MHz) |
| 59 | X2 | O | Crystal oscillating circuit output (f = 16.9344 MHz) |
| 60 | VDD | — | Power supply input (for oscillating circuit) |
| 61 | BYTCK | — | Byte clock output (no used, open) |
| 62 | /CLDCK | O | Sub-code frame clock signal output (fCLDCK = 7.35 kHz during normal playback) |
| 63 | FCLK | — | Crystal frame clock signal output (fFCLK = 7.35 kHz, double = 14.7 kHz) (no used, open) |
| 64 | IPFLAG | O | Interpolation flag output ("H": Interpolation) (no used, open) |
| 65 | FLAG | O | Flag output (no used, open) |
| 66 | CLVS | O | Spindle servo phase synchronizing signal output ("H": CLV, "L": rough servo) (no used, open) |
| 67 | CRC | O | Sub-code CRC checked output ("H": OK, "L": NG) (no used, open) |
| 68 | DEMPH | O | De-emphasis ON signal output ("H": ON) (no used, open) |
| 69 | RESY | — | Frame re-synchronizing signal output (no used, open) |
| 70 | /RST2 | I | Reset input through MASH circuit ("L": Reset) |
| 71 | /TEST | I | Test input |
| 72 | AVDD1 | — | Power supply input (for analog circuit) |
| 73 | OUTL | O | Left channel audio signal output |
| 74 | AVss1 | — | GND |
| 75 | OUTR | O | Right channel audio signal output |
| 76 | RSEL | I | RF signal polarity assignment input (at "H" level: RSEL = "H") (at "L" level: RSEL = "L") |
| 77 | CSEL | I | Crystal oscillating frequency designation input ("L": 16.9344 MHz) "H": 33.8688 MHz) |
| 78 | PSEL | I | Test input (normally, "L") |
| 79 | MSEL | I | Output frequency switching for SMCK terminal "H": SMCK = 8.4672 MHz "L": SMCK = 4.2336 MHz |
| 80 | SSEL | I | Output mode switching of SUBQ terminal ("H": Q code buffer mode) |

## ● IC703 (AN8389SE1)

| Pin No. | Terminal Name | I/O | Function |
|---|---|---|---|
| 1 | Vcc | — | Power supply |
| 2 | VREF | I | VREF input |
| 3 | IN4 | I | Motor driver (4) input |
| 4 | IN3 | I | Motor driver (3) input |
| 5 | GND | — | Ground connection |
| 6 | NC | — | Ground connection |
| 7 | NRESET | — | Reset input (no used, open) |
| 8 | GND | — | Ground connection |
| 9 | IN2 | I | Spindle motor driver (2) input |
| 10 | PC2 | I | PC2 (power cut) input |
| 11 | IN1 | I | Traverse motor driver (1) input |
| 12 | PC1 | I | PC1 (power cut) input |
| 13 | PVcc1 | — | Power supply (1) for driver |
| 14 | PGND1 | — | Ground connection (1) for driver |
| 15 | D1- | O | Traverse motor driver (1) reverse-action output |
| 16 | D1+ | O | Traverse motor driver (1) forward-action output |
| 17 | D2- | O | Spindle motor driver (2) reverse-action output |
| 18 | D2+ | O | Spindle motor driver (2) forward-action output |
| 19 | D3- | O | Tracking actuator (3) reverse-action output |
| 20 | D3+ | O | Tracking actuator (3) forward-action output |
| 21 | D4- | O | Focus actuator (4) reverse-action output |
| 22 | D4+ | O | Focus actuator (4) forward-action output |
| 23 | PGND2 | — | Ground connection (2) for driver |
| 24 | PVcc2 | — | Power supply (2) for driver |

# ■ Troubleshooting Guide

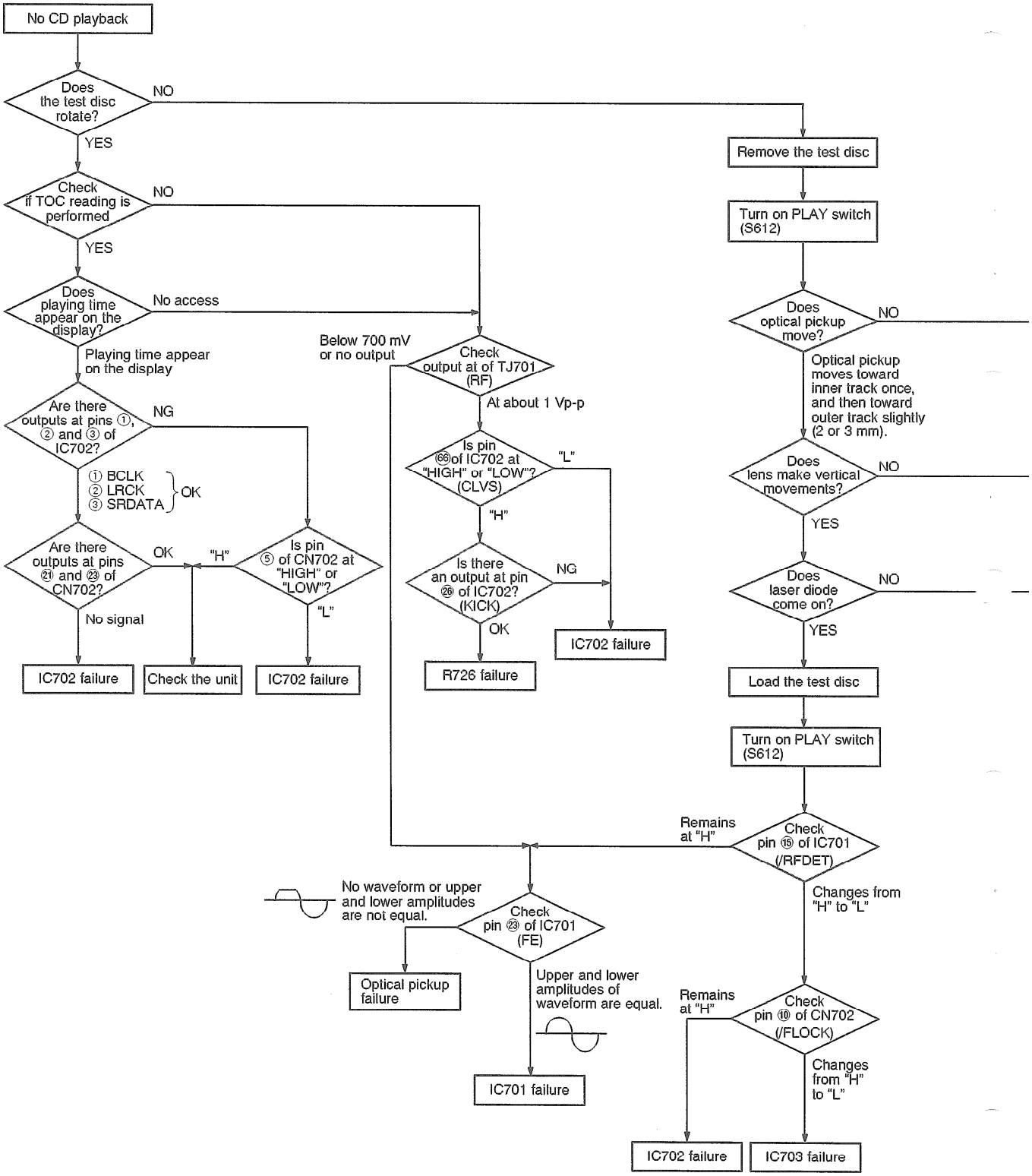

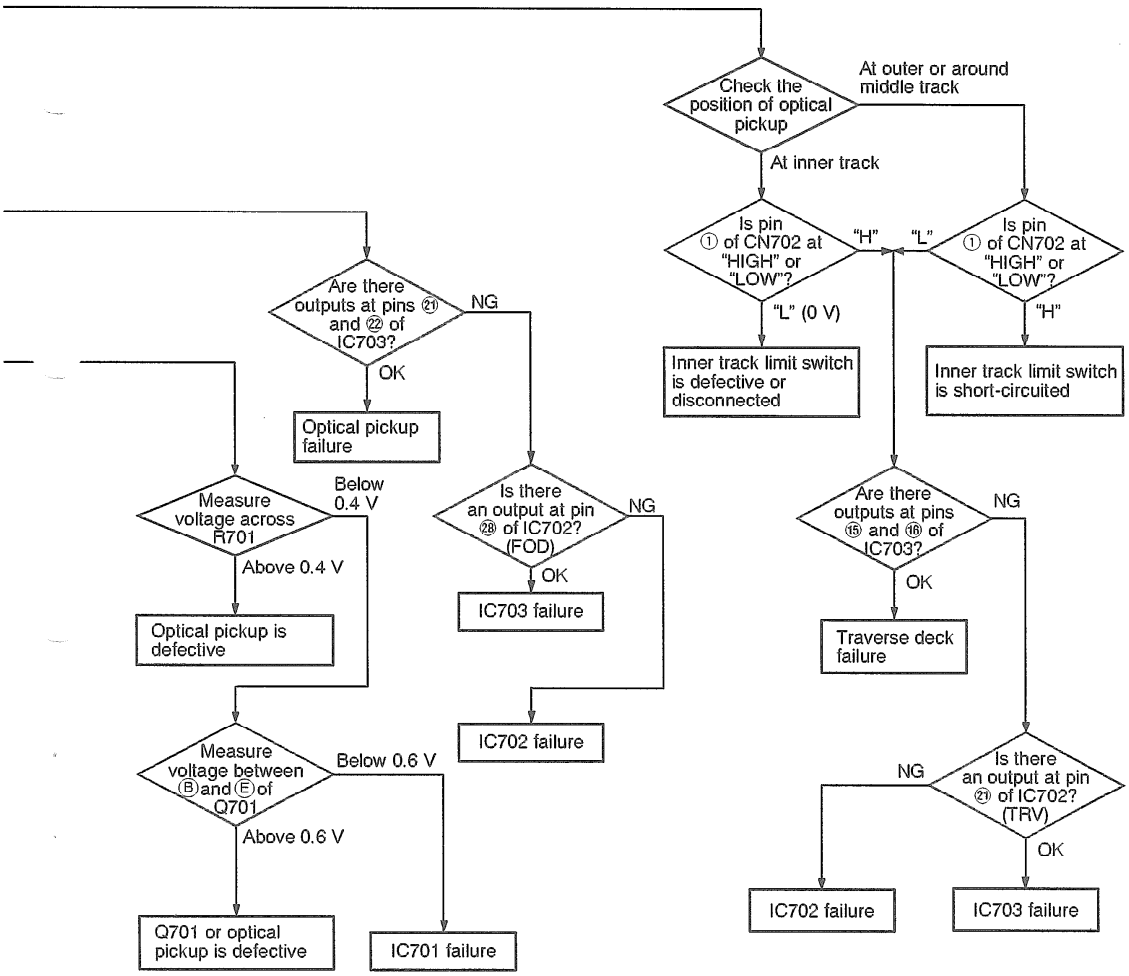
Check the position of optical pickup
At outer or around middle track
At inner track
Is pin ① of CN702 at "HIGH" or "LOW"?
"H"
"L"
Is pin ① of CN702 at "HIGH" or "LOW"?
"L" (0 V)
"H"
Inner track limit switch is defective or disconnected
Inner track limit switch is short-circuited
Are there outputs at pins ㉑ and ㉒ of IC703?
NG
OK
Optical pickup failure
Measure voltage across R701
Below 0.4 V
Above 0.4 V
Optical pickup is defective
Is there an output at pin ㉘ of IC702? (FOD)
NG
OK
IC703 failure
IC702 failure
Are there outputs at pins ⑮ and ⑯ of IC703?
NG
OK
Traverse deck failure
Measure voltage between Ⓑ and Ⓔ of Q701
Below 0.6 V
Above 0.6 V
Q701 or optical pickup is defective
IC701 failure
Is there an output at pin ㉑ of IC702? (TRV)
NG
OK
IC702 failure
IC703 failure

## ■ Block Diagram

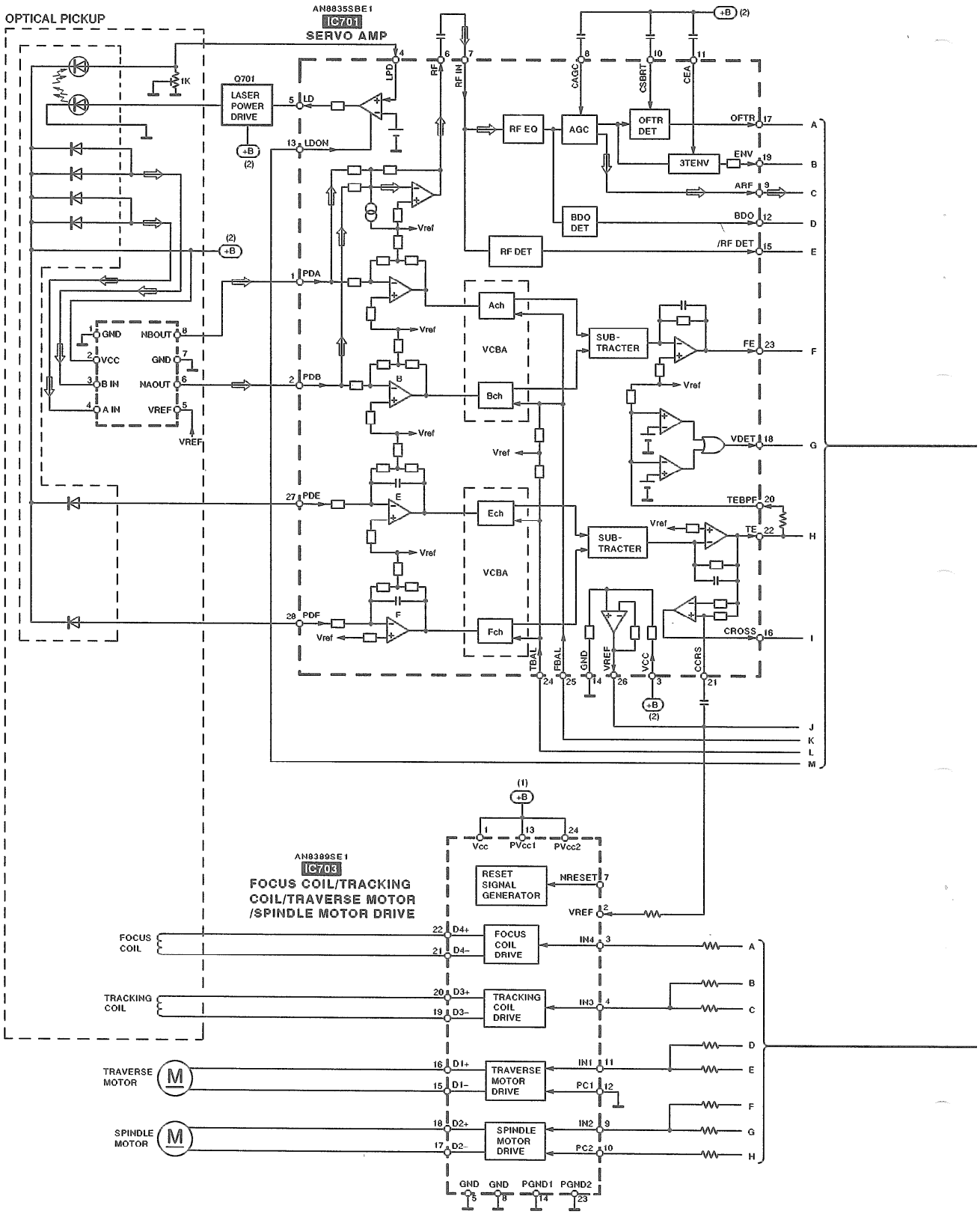

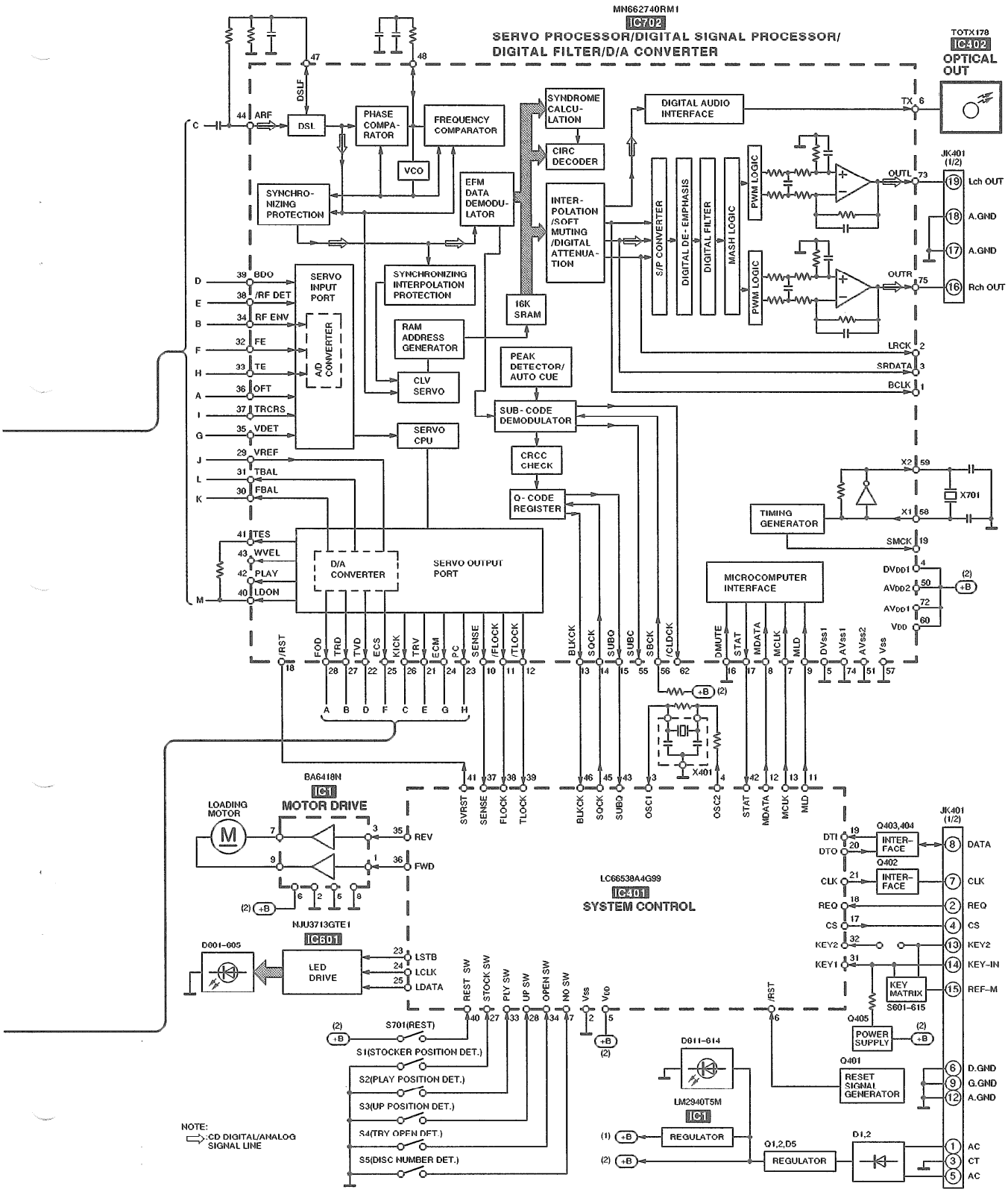
MN662740RM1
IC702
SERVO PROCESSOR/DIGITAL SIGNAL PROCESSOR/
DIGITAL FILTER/D/A CONVERTER
TOTX178
IC402
OPTICAL OUT
DSLF
ARF
DSL
PHASE COMPA-RATOR
FREQUENCY COMPARATOR
VCO
SYNCHRO-NIZING PROTECTION
EFM DATA DEMODU-LATOR
SYNDROME CALCU-LATION
CIRC DECODER
INTER-POLATION /SOFT MUTING /DIGITAL ATTENUA-TION
DIGITAL AUDIO INTERFACE
S/P CONVERTER
DIGITAL DE-EMPHASIS
DIGITAL FILTER
MASH LOGIC
PWM LOGIC
JK401 (1/2)
Lch OUT
A.GND
A.GND
Rch OUT
OUTL
OUTR
LRCK
SRDATA
BCLK
SERVO INPUT PORT
A/D CONVERTER
BDO
/RF DET
RF ENV
FE
TE
OFT
TRCRS
VDET
VREF
TBAL
FBAL
SYNCHRONIZING INTERPOLATION PROTECTION
RAM ADDRESS GENERATOR
CLV SERVO
SERVO CPU
16K SRAM
PEAK DETECTOR/ AUTO CUE
SUB-CODE DEMODULATOR
CRCC CHECK
Q-CODE REGISTER
TIMING GENERATOR
X701
SMCK
TES
WVEL
PLAY
LDON
D/A CONVERTER
SERVO OUTPUT PORT
MICROCOMPUTER INTERFACE
DVDD1
AVDD2
AVDD1
VDD
/RST
FOD
TRD
TVD
ECS
KICK
TRV
ECM
PC
SENSE
/FLOCK
/TLOCK
BLKCK
SQCK
SUBQ
SUBC
SBCK
/CLDCK
DMUTE
STAT
MDATA
MCLK
MLD
DVss1
AVss1
AVss2
Vss
X401
SVRST
FLOCK
TLOCK
OSC1
OSC2
BA6418N
IC1
MOTOR DRIVE
LOADING MOTOR
REV
FWD
LC66538A4G99
IC401
SYSTEM CONTROL
NJU3713GTE1
IC601
D601-605
LED DRIVE
LSTB
LCLK
LDATA
REST SW
STOCK SW
PLY SW
UP SW
OPEN SW
NO SW
S701(REST)
S1(STOCKER POSITION DET.)
S2(PLAY POSITION DET.)
S3(UP POSITION DET.)
S4(TRY OPEN DET.)
S5(DISC NUMBER DET.)
Q403,404
INTER-FACE
Q402
INTER-FACE
DTI
DTO
CLK
REQ
CS
KEY2
KEY1
KEY MATRIX
S601-615
Q405
POWER SUPPLY
Q401
RESET SIGNAL GENERATOR
D611-614
LM2940T5M
IC1
REGULATOR
Q1,2,D5
REGULATOR
D1,2
DATA
CLK
REQ
CS
KEY2
KEY-IN
REF-M
D.GND
G.GND
A.GND
AC
CT
AC
NOTE:
:CD DIGITAL/ANALOG SIGNAL LINE

# ■ Replacement Parts List

**Notes:** *Important safety notice:
Components identified by ⚠ mark have special characteristics important for safety.
Furthermore, special parts which have purposes of fire-retardant (resistors), high-quality sound (capacitors), low-noise (resistors), etc. are used.
When replacing any of components, be sure to use only manufacture's specified parts shown in the parts list.
*The parenthesized indications in the Remarks columns specify the areas. (Refer to the cover page for area.)
Parts without these indications can be used for all areas.
*[M] Indicates in Remarks columns parts that are supplied by MESA.
*Warning: This product uses a laser diode. Refer to caution statements on page 2.
*ACHTUNG: Die lasereinheit nicht zerlegen.
Die lasereinheit darf nur gegen eine vom hersteller spezifizierte einheit ausgetauscht werden.

| Ref. No. | Part No. | Part Name & Description | Remarks |
|---|---|---|---|
| | | | |
| | | INTEGRATED CIRCUIT(S) | |
| | | | |
| IC1 | LM2940T5 | IC, REGULATOR | ⚠ |
| IC1A | BA6418N | IC, MOTOR DRIVE | |
| IC401 | LC66538A4G99 | IC, SYSTEM CONTROL | |
| IC402 | TOTX178 | IC, TRANSMISSION MODULE | |
| IC601 | NJU3713GTE1 | IC, LED DRIVE | |
| IC701 | AN8835SBE1 | IC, SERVO AMP. | |
| IC702 | MN662740RM1 | IC, SERVO PROCESSOR | |
| IC703 | AN8389SE1 | IC, COIL & MOTOR DRIVE | |
| | | | |
| | | TRANSISTOR(S) | |
| | | | |
| Q1 | 2SB1548PQAU | TRANSISTOR | ⚠ |
| Q2 | 2SC3311AIQST | TRANSISTOR | ⚠ |
| Q401 | DTC114YSTP | TRANSISTOR | |
| Q402-404 | 2SC3311AIQST | TRANSISTOR | |
| Q405 | 2SA1309A-R | TRANSISTOR | |
| Q701 | 2SB709S | TRANSISTOR | |
| | | | |
| | | DIODE(S) | |
| | | | |
| D1, 2 | RL1N4003N02 | DIODE | ⚠ |
| D3, 4 | MA165 | DIODE | |
| D5 | MA4075MTA | DIODE | ⚠ |
| D401 | MA165 | DIODE | |
| D601-606 | SPR505MDTT | L. E. D. | |
| D611-614 | LNJ301MPUJAD | DIODE | |
| D617 | MA165 | DIODE | |
| | | | |
| | | COIL(S) | |
| | | | |
| L1, 2 | BL02RN2R65T2 | COIL | ⚠ |
| L401 | RLQA100JT-Y | COIL | |
| L402 | BL02RN2R65T2 | COIL | |
| | | | |
| | | OSCILLATOR(S) | |
| | | | |
| X401 | EFOEC4234T3 | OSCILLATOR(4.23 MHz) | |
| X701 | RSXB16M9J02T | OSCILLATOR(16.9344 MHz) | |
| | | | |
| | | SWITCH(ES) | |
| | | | |
| S1 | RSH1A005 | SW, STOCKER POSITION DETECT | |
| S2 | RSH1A032-U | SW, PLAY POSITION DETECT | |

| Ref. No. | Part No. | Part Name & Description | Remarks |
|---|---|---|---|
| S3 | RSH1A032-U | SW, UP POSITION DETECT | |
| S4 | RSH1A005 | SW, TRAY OPEN DETECT | |
| S5 | RSH1A032-U | SW, DISC NUMBER DETECT | |
| S601 | EVQ21405R | SW, DISC 5 | |
| S602 | EVQ21405R | SW, DISC 4 | |
| S603 | EVQ21405R | SW, DISC 3 | |
| S604 | EVQ21405R | SW, DISC 2 | |
| S605 | EVQ21405R | SW, DISC 1 | |
| S606 | EVQ21405R | SW, DISC CHECK | |
| S607 | EVQ21405R | SW, REPEAT | |
| S608 | EVQ21405R | SW, AI EDIT | |
| S609 | EVQ21405R | SW, RANDOM | |
| S610 | EVQ21405R | SW, R. SKIP/SEARCH | |
| S611 | EVQ21405R | SW, STOP | |
| S612 | EVQ21405R | SW, PLAY | |
| S613 | EVQ21405R | SW, F. SKIP/SEARCH | |
| S614 | EVQ21405R | SW, PAUSE | |
| S615 | EVQ21405R | SW, OPEN/CLOSE | |
| S701 | RSM0006-P | SW, REST | |
| | | | |
| | | CONNECTOR(S) | |
| | | | |
| CN1 | RJS1A6714 | CONNECTOR(14P) | |
| CN401 | RJS1A6814 | CONNECTOR(14P) | |
| CN402 | RJS1A6823 | CONNECTOR(23P) | |
| CN701 | RJU035T016-1 | CONNECTOR(16P) | |
| CN702 | RJS1A6723-1Q | CONNECTOR(23P) | |
| | | | |
| | | GND PLATE | |
| | | | |
| E1 | SNE1004-2 | GND PLATE | |
| | | | |
| | | JASK(S) | |
| | | | |
| JK401 | RJT065K19 | SYSTEM CONNECTOR(19P) | |
| | | | |
| | | TEST JUMPER(S) | |
| | | | |
| TJ701, 702 | EYF8CU | TEST JUMPER | |

Notes : * Capacity values are in microfarads (uF) unless specified otherwise, P=Pico-farads(pF) F=Farads(F)
* Resistance values are in ohms, unless specified otherwise, 1K=1,000(OHM) , 1M=1,000k(OHM)

| Ref. No. | Part No. | Values & Remarks |
|---|---|---|
| | | |
| | | RESISTORS |
| | | |
| R2 | ERDS2TJ471 | 1/4W 470 |
| R3 | ERDS2TJ223 | 1/4W 22K |
| R4 | ERDS2TJ101 | 1/4W 100 |
| R5 | ERDS2TJ102 | 1/4W 1K |
| R401 | ERDS2TJ105T | 1/4W 1M |
| R402 | ERDS2TJ102 | 1/4W 1K |
| R403 | ERDS2TJ104 | 1/4W 100K |
| R404 | ERDS2TJ471 | 1/4W 470 |
| R405 | ERDS2TJ101 | 1/4W 100 |
| R406 | ERDS2TJ471 | 1/4W 470 |
| R407 | ERDS2TJ123 | 1/4W 12K |
| R408-413 | ERDS2TJ103 | 1/4W 10K |
| R414 | ERDS2TJ471 | 1/4W 470 |
| R415-422 | ERDS2TJ103 | 1/4W 10K |
| R423-425 | ERDS2TJ101 | 1/4W 100 |
| R426 | ERDS2TJ102 | 1/4W 1K |
| R429 | ERDS2TJ103 | 1/4W 10K |
| R432 | ERDS2TJ123 | 1/4W 12K |
| R433 | ERDS2TJ103 | 1/4W 10K |
| R434 | ERDS2TJ102 | 1/4W 1K |
| R435 | ERDS2TJ101 | 1/4W 100 |
| R436, 437 | ERDS2TJ472 | 1/4W 4.7K |
| R438 | ERDS2TJ102 | 1/4W 1K |
| R439 | ERDS2TJ123 | 1/4W 12K |
| R440 | ERDS2TJ473 | 1/4W 47K |
| R441 | ERDS2TJ472 | 1/4W 4.7K |
| R442 | ERDS2TJ332 | 1/4W 3.3K |
| R443, 444 | ERDS2TJ472 | 1/4W 4.7K |
| R445 | ERDS2TJ102 | 1/4W 1K |
| R446 | ERDS2TJ472 | 1/4W 4.7K |
| R447, 448 | ERDS2TJ221 | 1/4W 220 |
| R449, 450 | ERDS2TJ473 | 1/4W 47K |
| R452 | ERDS2TJ103 | 1/4W 10K |
| R453 | ERDS2TJ473 | 1/4W 47K |
| R454 | ERDS2TJ102 | 1/4W 1K |
| R455, 456 | ERDS2TJ471 | 1/4W 470 |
| R457 | ERDS2TJ473 | 1/4W 47K |
| R601 | ERDS2TJ104 | 1/4W 100K |
| R602-604 | ERDS2TJ101 | 1/4W 100 |
| R605-610 | ERDS2TJ391 | 1/4W 390 |
| R611 | ERDS2TJ223 | 1/4W 22K |
| R612 | ERDS2TJ123 | 1/4W 12K |
| R613 | ERDS2TJ682T | 1/4W 6.8K |
| R614 | ERDS2TJ472 | 1/4W 4.7K |
| R615 | ERDS2TJ123 | 1/4W 12K |
| R616 | ERDS2TJ682T | 1/4W 6.8K |

| Ref. No. | Part No. | Values & Remarks |
|---|---|---|
| R617 | ERDS2TJ472 | 1/4W 4.7K |
| R618 | ERDS2TJ332 | 1/4W 3.3K |
| R619 | ERDS2TJ222 | 1/4W 2.2K |
| R620 | ERDS2TJ182 | 1/4W 1.8K |
| R621 | ERDS2TJ152 | 1/4W 1.5K |
| R622 | ERDS2TJ122 | 1/4W 1.2K |
| R623 | ERDS2TJ102 | 1/4W 1K |
| R624 | ERDS2TJ821 | 1/4W 820 |
| R627, 628 | ERDS2TJ221 | 1/4W 220 |
| R701 | ERJ6GEYJ4R7V | 1/10W 4.7 |
| R703 | ERJ6GEYJ823 | 1/10W 82K |
| R704 | ERJ6GEYJ102A | 1/10W 1K |
| R705 | ERJ6GEYJ103V | 1/10W 10K |
| R706 | ERJ6GEYJ102A | 1/10W 1K |
| R707 | ERJ6GEYJ474V | 1/10W 470K |
| R708 | ERJ6GEYJ154V | 1/10W 150K |
| R709 | ERJ6GEYJ683V | 1/10W 68K |
| R711 | ERJ6GEYJ154V | 1/10W 150K |
| R712 | ERJ6GEYJ221V | 1/10W 220 |
| R714 | ERJ6GEYJ121V | 1/10W 120 |
| R717, 718 | ERJ6GEYJ102A | 1/10W 1K |
| R720 | ERJ6GEY0R00A | 1/10W 0 |
| R721 | ERJ6GEYJ101V | 1/10W 100 |
| R722 | ERJ6GEYJ563V | 1/10W 56K |
| R723 | ERJ6GEYJ182V | 1/10W 1.8K |
| R724 | ERJ6GEYJ333V | 1/10W 33K |
| R725 | ERJ6GEYJ472V | 1/10W 4.7K |
| R726 | ERJ6GEYJ473V | 1/10W 47K |
| R727 | ERJ6GEYJ822V | 1/10W 8.2K |
| R728 | ERJ6GEYJ103V | 1/10W 10K |
| R731 | ERJ6GEYJ822V | 1/10W 8.2K |
| R735, 736 | ERJ6GEYJ101V | 1/10W 100 |
| R744 | ERJ6GEYJ103V | 1/10W 10K |
| R745 | ERJ6GEYJ155V | 1/10W 1.5M |
| R748 | ERJ6GEYJ182V | 1/10W 1.8K |
| R749 | ERJ6GEYJ682V | 1/10W 6.8K |
| R750, 751 | ERJ6GEYJ473V | 1/10W 47K |
| R752 | ERJ8GEYJ220V | 1/8W 22 |
| R770, 771 | ERJ6GEYJ155V | 1/10W 1.5M |
| R772 | ERJ6GEYJ273V | 1/10W 27K |
| | | |
| | | CHIP JUMPER(S) |
| | | |
| J701-709 | ERJ8GEY0R00A | 1/8W 0 |
| J714-717 | ERJ8GEY0R00A | 1/8W 0 |
| J721-731 | ERJ6GEY0R00A | 1/10W 0 |
| | | |
| | | CAPACITORS |
| | | |

| Ref. No. | Part No. | Values & Remarks |
|---|---|---|
| C1 | ECA1CM222B | 16V 2200U ⚠ |
| C1A | ECA1AKF820E | 10V 82U |
| C2, 3 | ECBT1E103ZF | 25V 0.01U |
| C4 | ECBT1H102KB5 | 50V 1000P |
| C5 | RCE1CKA470BG | 16V 47U |
| C401 | RCE1HKA3R3BG | 50V 3.3U |
| C402, 403 | ECBT1H102KB5 | 50V 1000P |
| C404, 405 | ECBT1E103ZF | 25V 0.01U |
| C406 | ECEA0JKA221B | 6.3V 220U |
| C407 | ECEA1AKA221B | 10V 220U |
| C408 | ECBT1H101KB5 | 50V 100P |
| C409 | ECBT1E103ZF | 25V 0.01U |
| C410 | ECEA0JKA470B | 6.3V 47U |
| C411 | ECBT1H104ZF5 | 50V 0.1U |
| C413, 414 | ECBT1H102KB5 | 50V 1000P |
| C415 | ECEA0JKA470B | 6.3V 47U |
| C416, 417 | ECBT1H102KB5 | 50V 1000P |
| C601 | ECBT1E103ZF | 25V 0.01U |
| C602 | ECEA1HKA010B | 50V 1U |
| C603-605 | ECBT1H101KB5 | 50V 100P |
| C701 | ECEA0JKA330I | 6.3V 33U |
| C702 | ECUZNE104MBN | 25V 0.1U |
| C703 | ECEA0JKA101I | 6.3V 100U |
| C704, 705 | ECUZNE104MBN | 25V 0.1U |
| C706 | ECUV1H272KBN | 50V 2700P |
| C707 | ECUV1E273KBN | 25V 0.027U |
| C708 | ECUE1H472KBN | 50V 4700P |
| C709 | ECUE1C473KBN | 16V 0.047U |
| C710 | ECUV1H182KBN | 50V 1800P |
| C711, 712 | ECUWNE104ZFN | 25V 0.1U |
| C713 | ECUV1C104MBM | 16V 0.1U |
| C714 | ECEA0JKA101I | 6.3V 100U |
| C716 | ECUE1H561KBN | 50V 560P |
| C717 | ECUWNE104ZFN | 25V 0.1U |
| C718 | ECUVNC224KBN | 16V 0.22U |
| C721 | ECUV1H100DCN | 50V 10P |
| C722 | ECUV1H150JCN | 50V 15P |
| C723 | ECEA1AKA221I | 10V 220U |
| C724 | ECUV1C104MBM | 16V 0.1U |
| C725, 726 | ECUE1H102KBN | 50V 1000P |
| C727, 728 | ECEA1HPK010I | 50V 1U |
| C730 | ECUWNE104ZFN | 25V 0.1U |
| C731, 732 | ECEA0JKA221I | 6.3V 220U |
| C733 | ECUZNE104MBN | 25V 0.1U |
| C734 | ECEA1AKA221I | 10V 220U |
| C735-737 | ECUWNE104ZFN | 25V 0.1U |
| C738 | ECUV1C154KBN | 16V 0.15U |
| C742 | ECUV1E273KBN | 25V 0.027U |
| C743 | ECUWNE104ZFN | 25V 0.1U |

| Ref. No. | Part No. | Values & Remarks |
|---|---|---|
| C744 | ECUE1E822KBN | 25V 8200P |
| C745 | ECUE1H102KBN | 50V 1000P |
| C747 | ECUE1H222KBN | 50V 2200P |
| C748 | ECUV1H471KBM | 50V 470P |
| C749 | ECUZNE104MBN | 25V 0.1U |
| C750 | ECUV1C104MBM | 16V 0.1U |
| C751 | ECUZNE104MBN | 25V 0.1U |
| C752 | ECUE1H152KBN | 50V 1500P |
| C753 | ECUV1H471KBM | 50V 470P |
| C754 | ECUE1H471KBN | 50V 470P |

**Note:** The reference number SA represent the grease and tool used for this unit.

| Ref. No. | Part No. | Part Name & Description | Remarks |
|---|---|---|---|
| | | | |
| | | CABINET PARTS | |
| 1 | RKMD222-3K | TOP CABINET | |
| 2 | RHD30007-K1 | SCREW | |
| 3 | XTBS3+8JFZ1 | SCREW | |
| 4 | RFKGLCH770EK | FRONT PANEL ASS'Y | |
| 4-1 | RKW0400-Q | PANEL | |
| 5 | RGR0217B-E | REAR PANEL | |
| 6 | REZ0555 | FFC(14P) | |
| 7 | REZ0765 | FFC(23P) | |
| 8 | RGL0314-Q | PANEL LIGHT | |
| 9 | RHD30065 | SCREW | |
| 10 | RXQ0507-K | HOLDER ARM ASS'Y | |
| 11 | RWJ7009125KK | FLAT CABLE(9P) (W401) | |
| 12 | RKA0068-N | FOOT | |
| 13 | RFKJLCA7-N | BOTTOM FRAME ASS'Y | |
| 13-1 | SHG1654 | RUBBER | |
| 14 | RMA0931 | ANGLE | |
| 15 | RSC0425 | SHIELD PLATE | |
| 16 | XTB3+8JFZ | SCREW | |
| 17 | RGK0737-K | TRAY DOOR | |
| 18 | RKQ0197-X | SLIDE PLATE | |
| 19 | RKQ0204-X | SLIDE PLATE | |
| 20 | RMB0472 | SPRING | |
| 21 | RMG0305-K | RUBBER | |
| 22 | RFKNLCH770EK | BUTTON ASS'Y | |
| | | | |
| | | LOADING MECHANISM | |
| 301 | RDG0309 | INTERMEDIATE GEAR | |
| 302 | RDG0310 | PULLEY GEAR | |
| 303 | RDGU311 | DRIVE GEAR | |
| 304 | RDG0313 | UP/DOWN GEAR | |
| 305 | RDV0036 | BELT | |
| 306 | RFKPDS790PK1 | MOTOR ASS'Y | |
| 307 | RGQ0170-K3 | DISC TRAY(1) | |
| 308 | RGQ0171-K | DISC TRAY(2) | |
| 309 | RGQ0172-K | DISC TRAY(3) | |
| 310 | RGQ0173-K | DISC TRAY(4) | |
| 311 | RGQ0174-K | DISC TRAY(5) | |
| 312 | RME0170 | LOCK LEVER SPRING | |
| 313 | RME0179 | ASSIST SPRING | |
| 314 | RME0180 | TRAY HOLD SPRING | |
| 315 | RFKNACH430GC | MECHANISM BASE ASS'Y | |
| 315-1 | RMF0221 | FELT | |
| 315-2 | RMG0402-K | RUBBER WASHER | |
| 316 | RML0379 | CONVERSION LEVER | |
| 317 | RML0380 | LOCK LEVER | |
| 318 | RML0383 | TRAY HOLD LEVER | |
| 319 | RML0385 | UP/DOWN LEVER | |
| 320 | RMM0139 | SLIDE PLATE(1) | |
| 321 | RMM0141 | SLIDE PLATE(2) | |
| 322 | RGQ0175-K | TRAY ORNAMENT | |

| Ref. No. | Part No. | Part Name & Description | Remarks |
|---|---|---|---|
| 323 | RHD20010 | SCREW | |
| 324 | RMA0868 | REINFORCING ANGLE | |
| 325 | RME0171 | BASE LOCK LEVER SPRING | |
| 326 | RME0172 | CARRIER LOCK LEVER SPRING | |
| 327 | RML0377 | BASE LOCK LEVER | |
| 328 | RML0378 | CARRIER LOCK LEVER | |
| 329 | RMR0884-K | TRAY BASE | |
| 330 | RHD20009-1 | SCREW | |
| 331 | RMC0274 | TRAY HOOK SPRING | |
| 332 | RME0173 | CARRIER ARM SPRING | |
| 333 | RML0376-1 | CARRIER ARM | |
| 334 | RMM0137 | CARRIER | |
| 335 | RDG0312 | SPEED GEAR | |
| 336 | RMM0134 | DRIVE RACK | |
| 337 | RMM0135 | CUSHION RACK | |
| 338 | XTN2+6F | SCREW | |
| 339 | XTS3+8J | SCREW | |
| 340 | XWE4E10 | WASHER | |
| 341 | RME0178 | HOLD SPRING | |
| 342 | RME0181 | LIFT PREVENTION SPRING(1) | |
| 343 | RME0182 | LIFT PREVENTION SPRING(2) | |
| 344 | RFKNLCA10EAK | MECHANISM COVER ASS'Y | |
| 344-1 | RMF0221 | FELT | |
| 345 | RML0381 | HOLD NAIL(1) | |
| 346 | RML0382 | HOLD NAIL(2) | |
| 347 | RML0384 | LIFT PREVENTION LEVER | |
| 348 | RHM245ZA | MAGNET | |
| 349 | RME0174 | CLAMP LEVER SPRING | |
| 350 | RFKNACH430GE | CLAMP BASE ASS'Y | |
| 351 | RML0388-1 | CLAMP LEVER | |
| 352 | RMR0761-W | CLAMPER | |
| 353 | RMR0899-K | FIXED PLATE | |
| 354 | XTB3+10J | SCREW | |
| 355 | RMR0975-W | TRAVERSE CAP | |
| 356 | REZ0793 | FLAT CABLE(3P) (W1) | |
| 357 | RMG0430-Q | RUBBER TUBE | |
| 358 | RAE0150Z | TRAVERSE DECK ASS'Y | |
| 358-1 | SHGD113-1 | FLOATING RUBBER | |
| 358-2 | SNSD38 | SCREW | |
| 359 | RME0109 | FLOATING SPRING(1) | |
| 360 | RME0142 | FLOATING SPRING(2) | |
| 361 | RMK0293 | TRAVERSE CHASSIS | |
| 362 | RMS0123-1 | TRAVERSE FIXED PIN | |
| 363 | XTN2+6G | SCREW | |
| 364 | XTV2+6G | SCREW | |
| 365 | REZ0792 | FLAT CABLE(3P) (W2) | |
| 366 | XTWS3+8T | SCREW | |
| | | | |
| | | GREASE OR JIG/TOOL | |
| SA1 | SZZP1054C | TEST DISC(PLAYABILITY) | |
| SA2 | RFKNLCH770EK | GREASE(CD MECHANISM) | |
| | | | |

## ■ Cabinet Parts Location

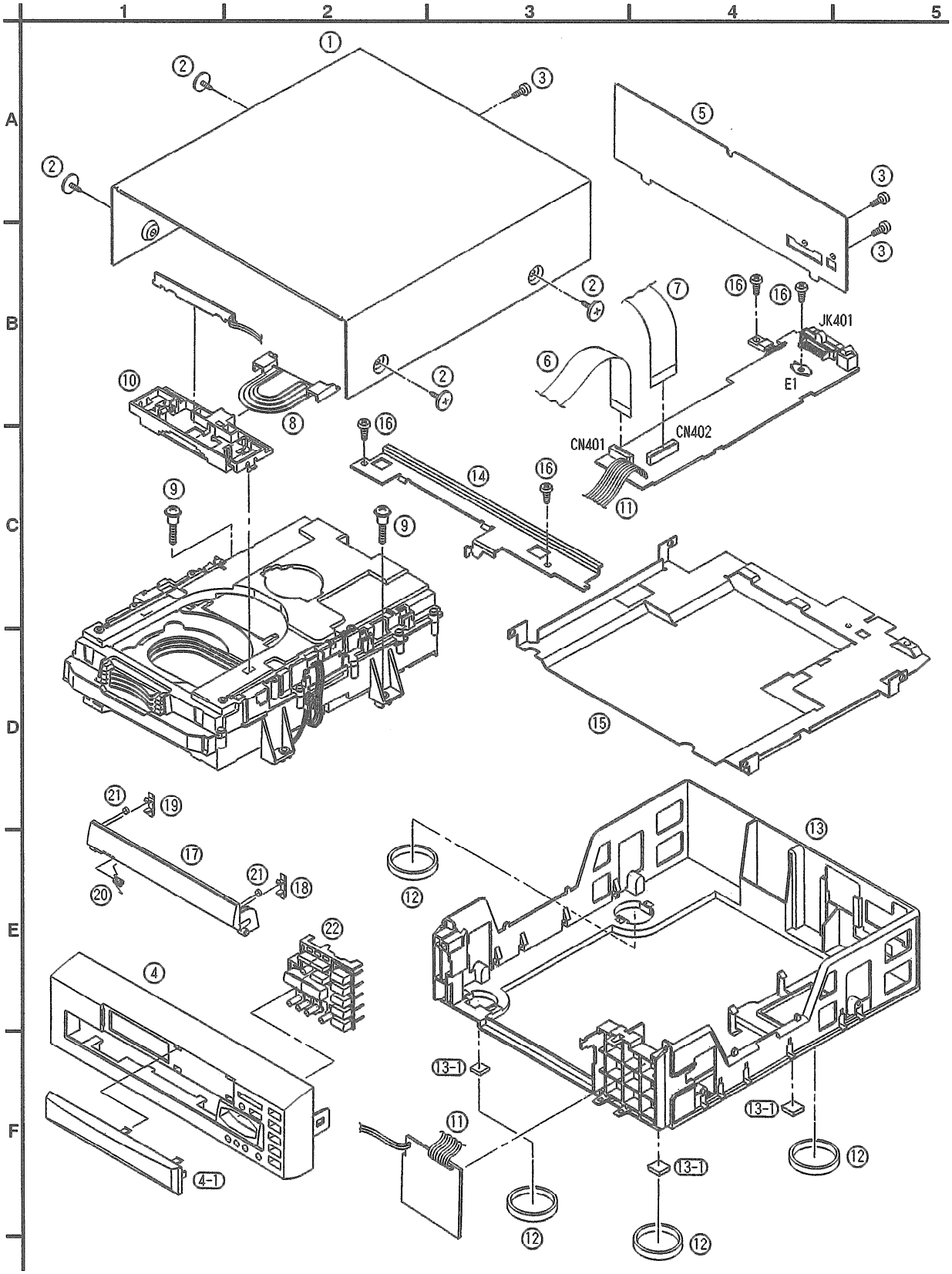

## Loading Unit Parts Location

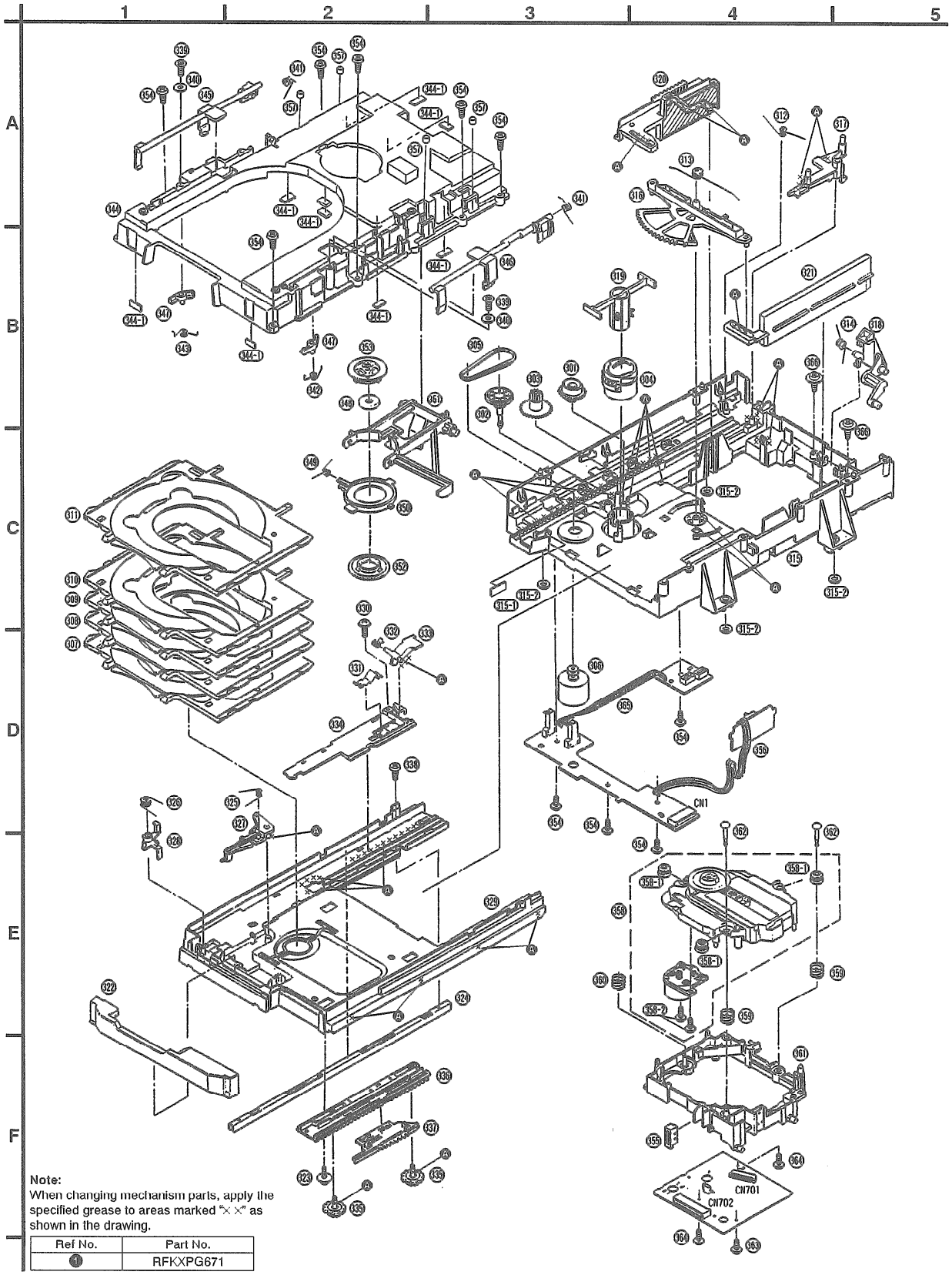


**Note:**
When changing mechanism parts, apply the specified grease to areas marked "×" as shown in the drawing.

| Ref No. | Part No. |
|---|---|
| ❶ | RFKXPG671 |



Printed in Japan
F960312500 HH/KH/TW